TOWN OF FIRESTONE
RAW WATER IRRIGATION SYSTEM
MASTER PLAN

FIRESTONE

A COMMUNITY IN MOTION

MARCH 2010

COLORADO CIVIL GROUP, INC.

COLORADO CIVIL GROUP, INC.
Engineering Consultants

March 1, 2010

Mr. Wesley LaVanchy, Town Manager
Town of Firestone
151 Grant Avenue
P.O. Box 100
Firestone, CO 80520

Re: Raw Water Irrigation System Master Plan
Project No. 0668.0149.00

Dear Mr. LaVanchy,

We are pleased to submit the Raw Water Irrigation System Master Plan for your review and consideration. This report includes our analysis of the infrastructure requirements and our recommendations to provide service to the Town. The information presented in this Master Plan will assist the Town with capital improvements associated with the raw water irrigation system.

We look forward to your review and will gladly answer any questions you may have.

Sincerely,

COLORADO CIVIL GROUP, INC.

COLORADO REGISTERED DAVID B LINDSAY 32135 3-1-10 PROFESSIONAL ENGINEER

David B. Lindsay, P.E.

COLORADO REGISTERED CHRIS E MESSERSMITH 3-1-10 38132 PROFESSIONAL ENGINEER

Chris E. Messersmith, P.E.

Table of Contents

1 Introduction 1
1.1 Project Goals 1
1.2 Scope of Work 1
1.2.1 Existing Master Plan Evaluation 1
1.2.2 Identifying Potential Areas for Raw Water Irrigation 1
1.2.3 Irrigation Ditch Evaluation 1
1.2.4 Hydraulic Analysis and Calculations 2
1.2.5 Raw Water System Modeling 2
1.2.6 Raw Water Irrigation System Master Plan 2
1.3 Existing Studies/Reports 2
1.3.1 2003 Water Master Plan (2003 WMP) 2
1.3.2 Raw Water Master Plan (RWMP, 2007) 2
1.3.3 Vogl Land – North Parcel Irrigation Report (VL-NPIR, 2005) 3
1.3.4 Town of Firestone Central Park Infrastructure Master Plan (CPIMP, 2006) 3
1.4 Candidate Areas for Irrigation 3
1.4.1 Town of Firestone Public Parks 4
1.4.2 Home Owner's Association (HOA) Parks 4
1.4.3 Excluded Parks 4
1.5 Irrigated Areas 8
1.6 Irrigation Requirements 8
1.6.1 Irrigation Demands 10
2 Potential Raw Water Irrigation Sources 11
2.1 Delivery Capabilities and Locations 11
2.1.1 Coal Ridge Ditch 11
2.1.2 Highland Southside (Godding) Ditch 12
2.1.3 Lower Boulder Ditch 12
2.1.4 Rural Ditch 13
2.2 Irrigation Ditch Summary 13
2.3 Irrigation Ditch Water Rights Issues 14
3 Evaluate Potential Storage Reservoirs 17
3.1 General Information 17
3.2 Firestone Central Park Storage Reservoir 17
3.2.1 Location and Preliminary Configuration 17
3.2.2 Storage Volume Calculations 19
3.2.3 Raw Water Acquisition Opinion of Cost 20

3.3 Vogl North Subdivision Storage Reservoir 21
3.4 Gravel Pit Storage Reservoirs 21
4 Raw Water System Transfer Designs 23
4.1 Transfer Pump Station Evaluation (Vogl) 23
4.2 Transfer Pump Station Evaluation (Public Works Facility) 24
4.3 Transfer System Design Criteria 25
4.4 Transfer System Opinions of Cost 28
5 Raw Water Distribution System Design 30
5.1 Distribution System Alignment Evaluation 30
5.2 Pump and Distribution System Modeling 30
5.2.1 Average Year Scenario 34
5.2.2 Drought Year Scenario 34
5.3 Pump Station Configuration and Sizing 34
5.4 Intake Structure Evaluation 35
5.5 Distribution System Design Criteria 35
5.6 Distribution System Opinions of Cost 36
5.7 Alternative Irrigation Supply 39
6 Overall Project Opinion of Cost 40
6.1 Annual Operation & Maintenance Expenses 40
7 References 41

Appendix A: Park Information ..... A
Appendix B: Precipitation and ET_0 Data ..... B
Appendix C: Irrigation Demands C
Appendix D: Irrigation Ditch Diversion Records ..... D
Appendix E: Storage Calculations ..... E
Appendix F: Transfer Pump System Calculations ..... F
Appendix G: Distribution System Pump Calculations ..... G

1 Introduction

1.1 Project Goals

The Town of Firestone has requested that Colorado Civil Group, Inc. prepare a Raw Water Irrigation System Master Plan (RWISMP or Master Plan) on behalf of the Town. The primary goal of this Master Plan is to provide a preliminary layout and design of a raw water system that would irrigate a number of public parks, both existing and future. The system will be sized to accommodate several Home Owner Association (HOA) parks and open spaces. This report also provides an explanation and summary of the various irrigation water supply options as well as water right issues that the Town will need to consider prior to implementing recommendations within this Master Plan.

1.2 Scope of Work

The scope of work directed by the Town of Firestone included evaluating existing master plans, identifying potential areas that would benefit from raw water service, reviewing irrigation ditch delivery capabilities, hydraulic analysis and calculations, raw water irrigation system modeling, and creation of the Master Plan document. A brief summary of each significant task is provided below and more detailed discussion is provided in later sections of this Master Plan.

1.2.1 Existing Master Plan Evaluation

To assist with preparation of this Master Plan, several previously prepared reports were evaluated and referenced. These include the 2003 Water Master Plan, Raw Water Master Plan (August 2007), the Vogl Land – North Parcel Irrigation Report, and the Town of Firestone Central Park Infrastructure Master Plan (Draft). Specific information from these reports is referenced throughout this Master Plan.

1.2.2 Identifying Potential Areas for Raw Water Irrigation

Existing and future park locations were evaluated to determine which sites would benefit most from this raw water irrigation system. Priority was placed on Town of Firestone public parks; however several HOA parks and open spaces were identified as potential candidates to be included. Specific public parks, HOA parks, and open spaces identified for inclusion are discussed further in this Master Plan. Parks and open spaces not evaluated in this Master Plan are listed with reasons for their exclusion.

1.2.3 Irrigation Ditch Evaluation

Existing irrigation ditches within the Firestone area were evaluated to determine their ability to support the proposed raw water irrigation system currently and in the future. Various water right issues associated with acquisition and using irrigation ditch water is also explained and summarized in Section 2.3 of this Master Plan.

1.2.4 Hydraulic Analysis and Calculations

Hydraulic analysis and calculations were prepared to aid in the layout and design of the raw water irrigation system. This includes the following:

- Supply hydrographs for the four irrigation ditches
- Demand hydrographs for the selected public parks, HOA parks, and open spaces
- Demand calculations identifying the application and delivery rates of raw water to the irrigated areas
- Storage calculations for sizing the raw water irrigation reservoirs

1.2.5 Raw Water System Modeling

The proposed raw water irrigation system was modeled to determine distribution pipe layout, sizing, and the pump requirements. Detailed modeling assumptions, methods and results are presented in later sections of this Master Plan.

1.2.6 Raw Water Irrigation System Master Plan

This RWISMP has been prepared to provide the Town of Firestone with a comprehensive report to implement the development of a raw water irrigation system. The plan provides a design and layout of the raw water system as well as a summary of the calculations and assumptions. The plan also provides an analysis of the possible raw water sources and the water rights issues that will be encountered in pursuing acquisition of the raw water supply for the system. A cost analysis and estimate is also provided for the infrastructure improvements.

1.3 Existing Studies/Reports

Several existing reports have been prepared that relate to this Master Plan. These reports have been studied and in some cases referenced prior to the preparation of this document. Those reports have been listed and summarized in the following sections.

1.3.1 2003 Water Master Plan (2003 WMP)

A water master plan was prepared for the Town in 2003 by TST, Inc. Consulting Engineers. This report assisted in the design and expansion of the potable water system and identified anticipated infrastructure needs for future development. The report also provided some analysis for a future raw water irrigation system. Water right issues were addressed for irrigation ditches and agricultural wells. A preliminary demand projection and conceptual layout were also provided.

1.3.2 Raw Water Master Plan (RWMP, 2007)

A raw water master plan was prepared for the Town in 2007 by Clear Water Solutions, Inc. This report was prepared to assist the Town in implementing a policy for raw water

development and acquisition. This document contains very detailed information on the irrigation ditches, water rights, and yields provided by each. This information is referenced throughout this Master Plan.

1.3.3 Vogl Land – North Parcel Irrigation Report (VL-NPIR, 2005)

An irrigation report was prepared for the Vogl Land - North Parcel by Prominence Development Corporation in 2005. The report presented the design of the proposed raw water system for the Vogl development including demand calculations, delivery system, pump, and storage reservoir designs. The water rights associated with the property were also discussed along with the dedication of irrigation ditch shares to the Town of Firestone. The technical information on the Coal Ridge Ditch within this report was prepared by Leaf Engineering, Inc. on behalf of the Ditch Company.

1.3.4 Town of Firestone Central Park Infrastructure Master Plan (CPIMP, 2006)

A Central Park Infrastructure Master Plan was prepared by TST, Inc. in 2006. The Master Plan is available as a Draft and was never finalized. Section 8 of the CPIMP, 2006 focused on the implementation of a raw water irrigation system at Central Park. The report discussed the landscaping concept, provided assumptions for the total irrigated area, discussed irrigation storage pond alternatives, and provided conceptual interim and ultimate pond designs. Several assumptions in the report have been used in preparation of this Master Plan. These assumptions are summarized in later sections of this report.

1.4 Candidate Areas for Irrigation

The Town of Firestone Master Plan 2008 identified all of the candidate areas that could be served by the raw water irrigation system. Figure 18: Parks, Trails and Open Space: Phase 1 from this document is shown as Figure 1.4.1 on page 6. Existing and future parks, trails, and open spaces within the Town of Firestone were evaluated to determine which areas should be irrigated with the Town's proposed raw water system. After the areas were determined to be included, a priority assignment from 1 to 3 was give to each of the parks/open spaces that will assist with phasing of the necessary infrastructure construction. Priority 1 parks were chosen due to their proximity to the initial infrastructure necessary to connect the raw water source with the storage and pumping facilities (Central Park). Figure 1.4.2 lists all of the included parks, with their Park I.D. and shows the priority rankings. **The determination of which parks will be irrigated with the raw water system is a recommendation and can be revised in the future depending on the goals of the Town's Parks and Trails Committee, Planning Commission, and/or the Town Board.**

1.4.1 Town of Firestone Public Parks

The parks that are to be irrigated with the raw water system were chosen based on several factors including: reduction in use of potable water used for irrigation and proximity to proposed distribution system. The proximity to the proposed distribution system is an important factor because it helps to minimize infrastructure and maintenance costs for the Town. For this reason, parks located west of Colorado Boulevard were not determined to be a high priority. Raw water distribution mains were laid out with the goal of minimizing infrastructure costs, while being located in Town right-of-way or other corridors that allow access and simple construction. It may be beneficial to meter the raw water at each location. This will ensure that the usage follows the recommendations within this Master Plan.

1.4.2 Home Owner's Association (HOA) Parks

HOA parks included in this Master Plan were chosen based on their proximity to proposed raw water infrastructure that would be serving Town parks. The choice to connect to the Town's system would be made by each individual HOA and not dictated by the Town. A raw water rate would need to be determined by the Town so that each HOA could be billed for their metered usage.

1.4.3 Excluded Parks

It is not economically feasible to irrigate all existing and future parks and open spaces in the Town with a raw water irrigation system. The reasons are primarily the distance from the proposed infrastructure and the park(s) size. In some instances, it would not be beneficial to extend infrastructure to serve just one park. Some of the parks within Firestone are relatively small in size and do not have a significant irrigation demand. The costs to extend raw water infrastructure to these areas cannot be justified. Parks not included in this study are listed below with the primary reason(s) for their exclusion.

1. Cottonwood Hollow Park
    - Primarily a non-irrigated natural area
    - Distance from proposed raw water system infrastructure
    - Relatively small size
2. Firestone Meadows Park
    - Distance from proposed raw water system infrastructure
    - Relatively small size
3. Firestone Trail
    - Primarily a non-irrigated natural area
    - Small percentage of natural areas and open space will require irrigation. These areas can be evaluated on a case by case basis. If the raw water irrigation infrastructure is installed in the vicinity of these areas, then it may be beneficial to connect them to this system. These irrigated areas

are relatively small and can be considered, negligible compared to the system.

4. Gateway Park & Trailhead
    - Relatively small size
5. Godding Hollow Park & Open Space
    - Primarily a non-irrigated natural area
    - Small percentage of natural areas and open space will require irrigation
6. Miner's Park
    - Relatively small size
7. Monarch Estates Park
    - Distance from proposed raw water system infrastructure
8. Onorato Park
    - Relatively small size
9. Saddleback Golf Club
    - Served by a private raw water irrigation system
10. Settler's Park
    - Distance from proposed raw water system infrastructure
11. Shores Park
    - Distance from proposed raw water system infrastructure
12. Vogl
    - To be served by a future private raw water irrigation system

The Vogl North Park is shown as a Priority 1 park in Figure 1.4.2 but has not been accounted for in this Master Plan. The Vogl project will be developed with a raw water irrigation system that will be owned and operated by the Town of Firestone. A preliminary design has previously been prepared for this system, excluding this area from the calculations within this Master Plan.

FIGURE 1.4.1

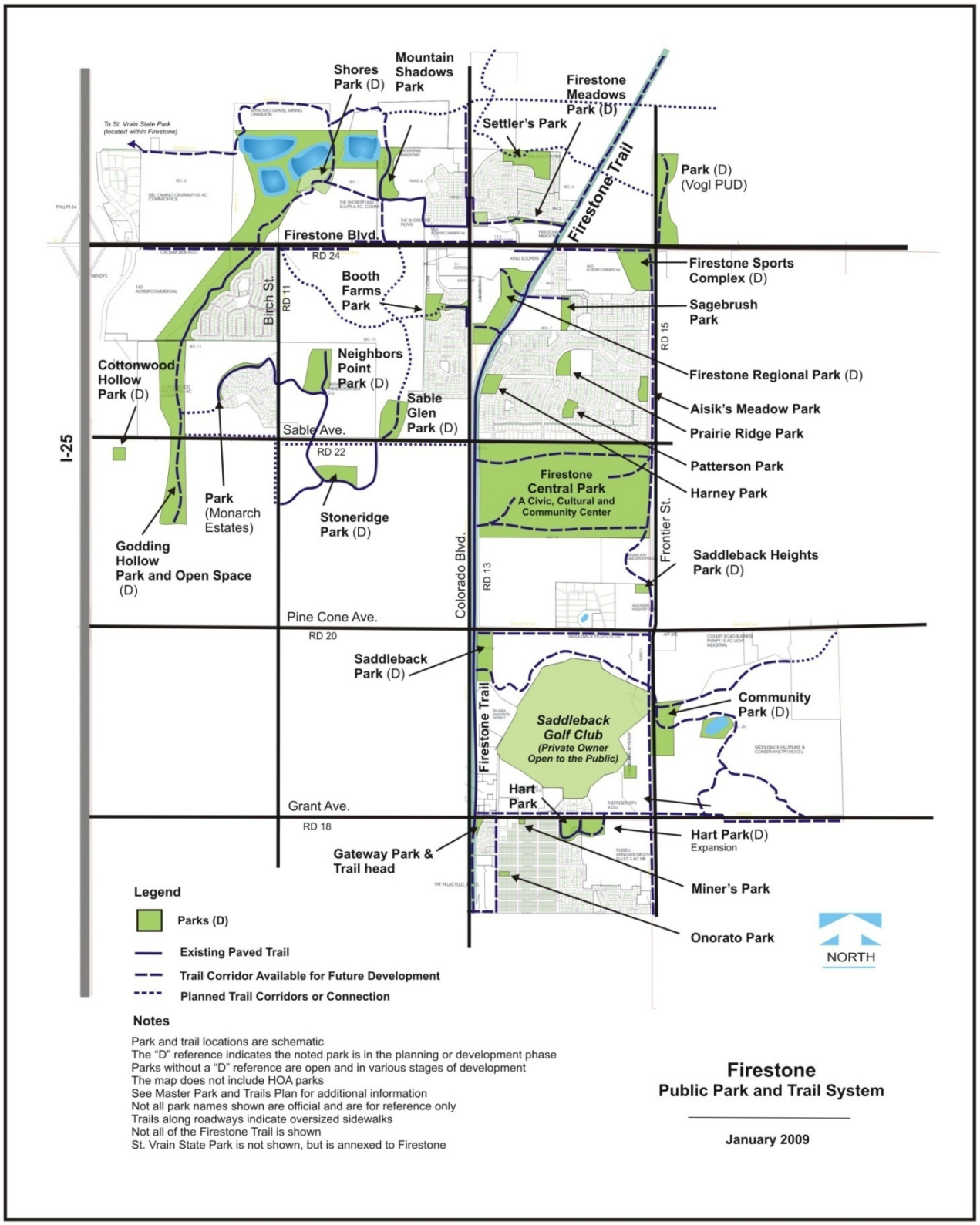
Shores Park (D)
Mountain Shadows Park
Firestone Meadows Park (D)
Settler's Park
Firestone Trail
Park (D) (Vogl PUD)
To St. Vrain State Park (located within Firestone)
Firestone Blvd.
RD 24
Birch St.
RD 11
Booth Farms Park
Firestone Sports Complex (D)
Sagebrush Park
RD 15
Cottonwood Hollow Park (D)
Neighbors Point Park (D)
Firestone Regional Park (D)
Sable Glen Park (D)
Aisik's Meadow Park
Prairie Ridge Park
Sable Ave.
I-25
RD 22
Patterson Park
Firestone Central Park
A Civic, Cultural and Community Center
Harney Park
Park (Monarch Estates)
Stoneridge Park (D)
Frontier St.
Saddleback Heights Park (D)
Godding Hollow Park and Open Space (D)
Colorado Blvd.
RD 13
Pine Cone Ave.
RD 20
Saddleback Park (D)
Community Park (D)
Saddleback Golf Club
(Private Owner Open to the Public)
Firestone Trail
Hart Park
Grant Ave.
RD 18
Hart Park(D) Expansion
Gateway Park & Trail head
Miner's Park
Onorato Park
NORTH
Legend
Parks (D)
Existing Paved Trail
Trail Corridor Available for Future Development
Planned Trail Corridors or Connection
Notes
Park and trail locations are schematic
The "D" reference indicates the noted park is in the planning or development phase
Parks without a "D" reference are open and in various stages of development
The map does not include HOA parks
See Master Park and Trails Plan for additional information
Not all park names shown are official and are for reference only
Trails along roadways indicate oversized sidewalks
Not all of the Firestone Trail is shown
St. Vrain State Park is not shown, but is annexed to Firestone
Firestone
Public Park and Trail System
January 2009

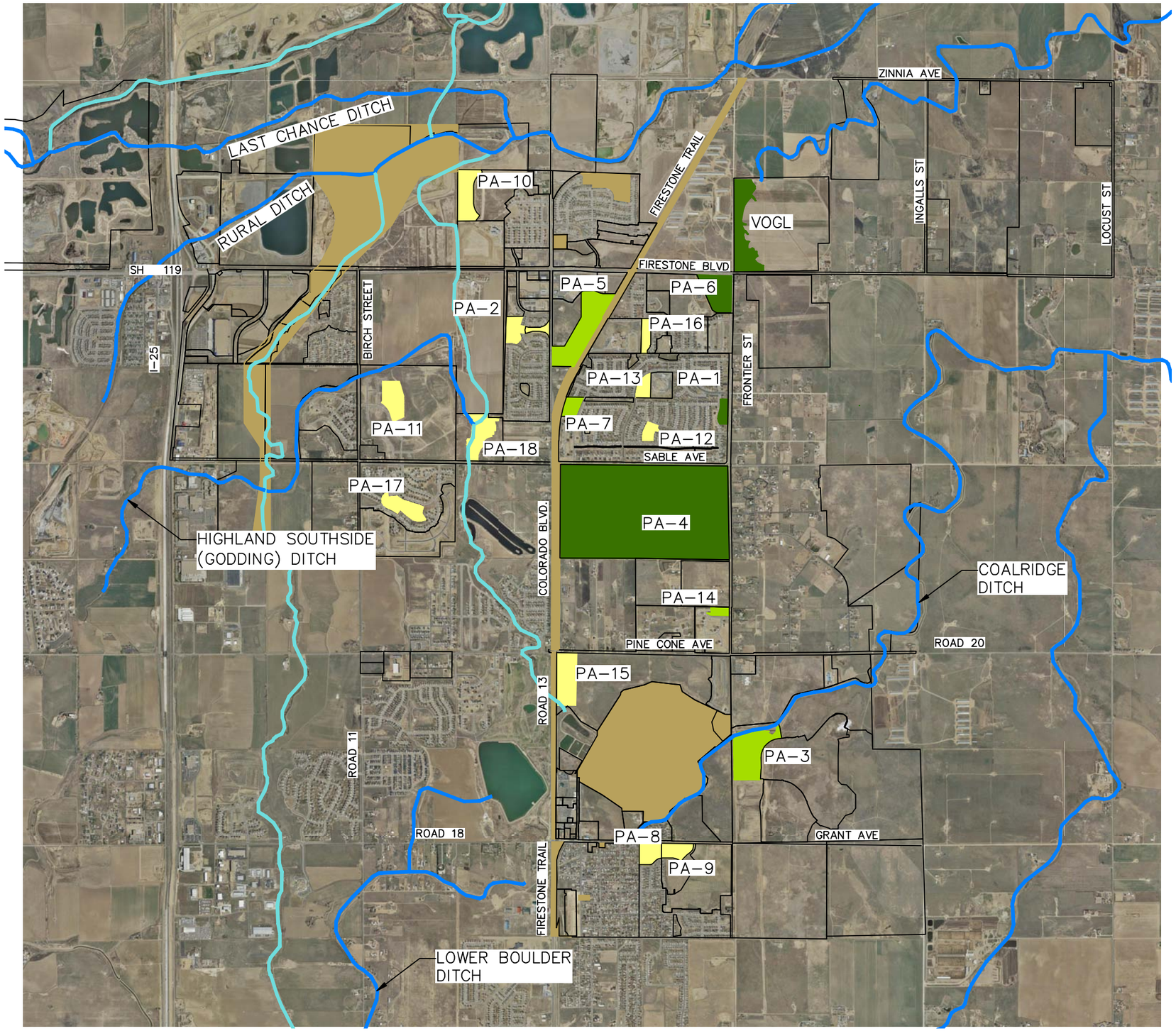

LEGEND

- PRIORITY 1
- PRIORITY 2
- PRIORITY 3
- AREA NOT INCLUDED
- EXISTING DRAINAGE WAY
- EXISTING DITCH

PARK INFORMATION

PARK I.D.	PARK NAME
PA-1	AISIK'S MEADOW PARK
PA-2	BOOTH FARMS PARK
PA-3	COMMUNITY PARK
PA-4	FIRESTONE CENTRAL PARK
PA-5	FIRESTONE REGIONAL PARK
PA-6	FIRESTONE SPORTS COMPLEX
PA-7	HARNEY PARK
PA-8	HART PARK
PA-9	HART PARK EXPANSION
PA-10	MOUNTAIN SHADOWS PARK
PA-11	NEIGHBORS POINT PARK
PA-12	PATTERSON PARK
PA-13	PRAIRIE RIDGE PARK
PA-14	SADDLEBACK HEIGHTS PARK
PA-15	SADDLEBACK PARK
PA-16	SAGEBRUSH PARK
PA-17	STONERIDGE PARK
PA-18	SABLE GLEN PARK

N

0 1500 3000
scale 1" = 3000' feet

FIRESTONE
A COMMUNITY IN MOTION

REVISIONS
DATE | REVISION DESCRIPTION

CCG COLORADO CIVIL GROUP, INC. ENGINEERING CONSULTANTS
1413 W. 29TH STREET
LOVELAND, COLORADO 80538
(970) 278-0329

TOWN OF FIRESTONE
RAW WATER IRRIGATION SYSTEM MASTER PLAN
FIGURE 1.4.2
PARK IRRIGATION PRIORITIES

FILENAME: RWMP FIGURES
DESIGNED: C.E.M.
CHECKED: D.S.L.
JOB NO.: 0668.0149.00
SCALE: 1" = 3000'
DATE: DECEMBER 2009
SHEET NO.: 1 OF 1

1.5 Irrigated Areas

After the candidate parks were identified, the irrigated area for each location was determined. Table A1 (Appendix A) lists the gross acreage for each park based on the Town's records. Because each park contains a combination of parking lots, playgrounds, sidewalks, non-irrigated areas, athletic courts, etc., only a percentage of each park will be irrigated. Aerial photos were used along with field inspections to determine the irrigated percentage for multiple parks, which are as follows:

- Aisik's Meadow Park (22.3% irrigated area)
- Harney Park (64.8% irrigated area)
- Hart Park (70.4% irrigated area)
- Settler's Park (86.8% irrigated area)

The results from these calculations are shown on Figure A1 (Appendix A) and yield a weighted irrigated area average of 67.0%. For the purposes of this master plan, the percentage was increased to 75.0% for all park and open space areas except for Firestone Central Park. The CPIMP, 2006 listed the irrigated area for Firestone Central Park as 90.0 acres, which is equivalent to 34.4% of the total area. The total irrigated area for the Priority 1-3 parks is 241.5 acres per Table A1 (Appendix A).

1.6 Irrigation Requirements

The irrigation demand is a function of the local climate and the type of landscaping to be irrigated. These parameters determine the evapotranspiration (ET_O) rate, which is defined as the process of transferring moisture from the earth to the atmosphere by evaporation of water and transpiration from plants. The ET_O rate is the historical grass reference evapotranspiration for the growing season of April 1 through October 31 and is used to determine the amount of water a typical landscape would require during this period. The ET_O requirement is satisfied in two ways, irrigation and precipitation. ET_O and precipitation data is collected and recorded by the Northern Colorado Water Conservancy District (NCWCD) at twenty four (24) weather station locations within the District. The ET_O data is logged daily during the months of March through October and the precipitation data is logged daily on an annual basis. This data can be found at the NCWCD website (www.ncwcd.org).

For this Master Plan, the Longmont South weather station was selected because of its proximity to the Town of Firestone. This weather station is identified as an alfalfa hay site at Swalde Farm and is located on Lookout Road just east of the intersection with Highway 287. This weather station is approximately 10.25 miles (cross country) from the intersection of Firestone Boulevard and Colorado Boulevard. Data from this weather station as taken from the NCWCD website and used to create the following Tables in Appendix B:

- Table B1 Precipitation Summary, Longmont South
- Table B2 ET_O Summary, Longmont South
- Tables B3 (2007) – B13 (1998) NCWCD Weather Station Data, Longmont South

The monthly precipitation data is summarized in Table B1 and the monthly ET_O data is summarized in Table B2 for the years 1998 through 2007. The daily precipitation and ET_O data is listed in Tables B3 through B12 for the years 2007 through 1998, respectively. Due to the amount of information, Tables B3 – B12 can be found on the CD in Appendix B.

This data has been used to establish the average ET_O and precipitation rates from 1998 to 2007. During these 10 years the average precipitation was 11.64 inches and the average ET_O was 39.43 inches. The results from this 10 year period were used to establish the Average Year Scenario. In 2002, the State of Colorado experienced one of the worst drought years on record. During this year the precipitation was 8.18 inches and the average ET_O was 41.84 inches. The data from the year 2002 was used to establish the Drought Year Scenario.

A third and final scenario was also evaluated as requested by the Public Works Department. This scenario assumes that 2 inches of raw water will be applied per week during the entire irrigation season. This constant application is independent of precipitation rates or ET_O requirements. This scenario is referred to as the Public Works Scenario throughout this Master Plan.

The NCWCD has an established procedure for calculating the irrigation demand as a function of several variables including the ET_O, lawn type, precipitation, and irrigation application efficiency. A detailed explanation of these calculations can be found in Appendix C. The irrigation demand has been calculated for the following lawn types as defined by the NCWCD:

1. **High-Performance Lawn (HPL) –** Ideal for heavy use such as sports fields, high-use parks, or requires a aesthetic appearance because of surrounding uses. The High Performance Lawn has a crop coefficient of $K_c = 0.90$.

2. **Traditional Lawn (TL) –** Found in most residential neighborhoods, parks, businesses, shopping centers, etc. where foot traffic and uses are not excessive. The Traditional Lawn has a crop coefficient of $K_c = 0.81$.

3. **Low Maintenance Lawn (LML) –** Seldom used for activities but is used to cover the ground to control erosion, weed infestation, or serve as a firebreak. Traffic medians, greenbelts, detention ponds, or even home lawns can fall into this category. Typically these lawns require less mowing, fertilizer and water. The Low Maintenance Lawn has a crop coefficient of $K_c = 0.72$.

Although some areas within the Town of Firestone parks and open space areas may fall into the high-performance and low maintenance lawn categories, the traditional lawn category has been used to calculate an average irrigation demand for all areas. Even areas such as the Firestone Sports Complex will have a combination of all three lawn types. The irrigation requirements for the high-performance lawn, traditional lawn, and low maintenance lawn can be found in Tables C1, C2, and C3, respectively for the average year scenario. The annual irrigation requirement for a traditional lawn is 2.48 acre-feet per acre (Table C2). The monthly irrigation requirements from Tables C1 – C3 are plotted on Figure C1 (Appendix C).

The irrigation requirements for the high-performance lawn, traditional lawn, and low maintenance lawn can be found in Tables C4, C5, and C6, respectively for the drought year scenario. The monthly irrigation requirement from these tables is plotted on Figure C2 in Appendix C. The annual irrigation requirement for a traditional lawn is 2.96 acre-feet per acre (Table C5), which is a 19.4% increase over the average year scenario. The irrigation requirements for the public works scenario can be found in Table C7 and on Figure C3 in Appendix C.

As previously mentioned the public works scenario assumes that 2 inches of raw water will be applied per week during the entire irrigation season. The only variable under this scenario is the number of days per month during the irrigation season. The annual irrigation requirement for this scenario is 5.10 acre-feet per acre (Table C7), which is a 105.7% increase over the average year scenario.

1.6.1 Irrigation Demands

The irrigation requirements presented in Section 1.6 were used to calculate the monthly and annual volumes of raw water required for the Average Year, Drought Year, and Public Works Scenarios. Table 1.6.1 summarizes the irrigation demands for the Priority 1-3 Parks which are listed in Tables C8 - C10, respectively. The volume of raw water needed to irrigate the Priority 1-3 parks ranges from 600 acre-feet to 1,231 acre-feet per year depending on the scenario.

Table 1.6.1 Irrigation Demands

Park Priority	Irrigation Demand		
	Average Year Scenario (acre-ft)	Drought Year Scenario (acre-ft)	Public Works Scenario (acre-ft)
PRIORITY 1	265.3	315.8	544.5
PRIORITY 2	126.6	150.7	259.9
PRIORITY 3	207.8	247.4	426.5
	599.8	**713.9**	**1,230.8**

The third scenario results in a demand that exceeds even the drought year scenario using NCWCD criteria. This overestimated demand would result in significant additional expense in the capital purchase of water rights, increase size and cost of infrastructure, and in annual operation and maintenance costs. For these reasons, this scenario is not recommended.

2 Potential Raw Water Irrigation Sources

2.1 Delivery Capabilities and Locations

The delivery capabilities of the existing irrigation ditches near or within the Town of Firestone were researched in detail and reported to the Town (RWMP, 2007). Sections 2.1.1 – 2.1.4 summarize the delivery capabilities and locations of four of the available irrigation ditches, which are listed below:

- Coal Ridge Ditch
- Highland Southside (Godding) Ditch
- Lower Boulder Ditch
- Rural Ditch

These four irrigation ditches are the most feasible sources of raw water for the Town's irrigation system (RWMP, 2007).

Hydrographs were created for these four irrigation ditches to show the average monthly diversions (total and per share) based on data from previous reports. The data for the irrigation ditch diversions for the Highland Southside (Godding), Lower Boulder and Rural ditches represent the years 1950 to 2005 and were provided in the RWMP, 2007. Diversion records for the Coal Ridge Ditch represent a fifty year average and were provided in the VL-NPIR, 2005.

2.1.1 Coal Ridge Ditch

The Coal Ridge Ditch delivery is measured in Section 25, Township 2 North, Range 68 West of the 6th Principal Meridian (P.M.), Weld County. This ditch shares water rights with the Lower Boulder Ditch Company. The Coal Ridge Ditch Company owns 48 preferred shares of Lower Boulder Ditch water, which are divided into 2,100 shares of the Coal Ridge Ditch Company (RWMP, 2007). The Coal Ridge Ditch has a 50-year average annual diversion of 1.25 acre-feet per share which is used for the average-year scenario. This ditch had an annual diversion of 1.05 acre-feet (16% reduction) per share in 2002 which is used for the drought-year scenario. This data was taken from the monthly flow rates provided in Table 2 (VL-NPIR, 2005) and is summarized in Table D1 (Appendix D). Hydrographs illustrating the monthly diversions in acre-feet for both scenarios are shown on Figure D1 (Appendix D). This ditch has the smallest diversion per share of the four referenced in this Master Plan.

A discrepancy exists between two of the existing studies/reports referenced in this Master Plan. The RWMP, 2007 states that the Coal Ridge Ditch has an average annual diversion of 0.50 acre-ft and the VL-NPIR, 2005 states that the value is approximately 1.25 acre-feet. The average annual diversion rate of 1.25 acre-feet was used in this Master Plan, while the price of $6,000 per acre-foot (RWMP, 2007) was used to set a price per share of $7,500. Even if the diversion rate per share is found to be different, the price per acre-foot should remain constant. The Coal Ridge Ditch is the ideal raw

water supply option for the Town of Firestone (RWMP, 2007). The advantages to this option are location (providing the ability to gravity feed most parts of town) and price (it is the least expensive per acre-foot in the area). Furthermore, this water right can be acquired through annexation because there are existing lands within the Town limits that were historically irrigated with this ditch right. Because of these benefits, the Town of Firestone should actively pursue the acquisition of Coal Ridge Ditch irrigation shares. **This Master Plan further evaluates the Coal Ridge Ditch as the primary source to support the raw water irrigation system, at least in the foreseeable future.**

2.1.2 Highland Southside (Godding) Ditch

The Highland Southside (Godding) Ditch has its head gate on Idaho Creek, located in Section 21, Township 2 North, Range 68 West of the 6th P.M., Weld County. The Highland Southside (Godding) Ditch Company has 183 shares, which deliver an average annual diversion of 27.2 acre-feet per share for the years 1950-2005 which is used for the average-year scenario. The Highland Southside (Godding) Ditch had an annual diversion of 8.3 acre-feet (69.5% reduction) per share in 2002 which is used for the drought-year scenario. This information was provided in the RWMP, 2007 (Appendix A) and is summarized in Table D2 (Appendix D). Hydrographs illustrating the monthly diversions in acre-feet for both scenarios are shown on Figure D2 (Appendix D).

The approximate cost per share is $177,000 which equivalent to $6,500 per acre foot. The cost per share was estimated as it could not be confirmed through the ditch company or water brokers (RWMP, 2007). The Highland Southside (Godding) Ditch should be considered on a case-by-case basis due to the need for storage to irrigate in its off-peak delivery months (RWMP, 2007). The report states that if shares become available to the Town through annexation, the Town should accept the Highland Southside (Godding) Ditch water. This ditch right was significantly impacted during the drought year scenario. **For these reasons, this ditch right has not been further evaluated as the source to support the raw water irrigation system in this Master Plan.**

2.1.3 Lower Boulder Ditch

The Lower Boulder Ditch head gate is on Boulder Creek, located in Section 16, Township 1 North, Range 69 West of the 6th P.M., Boulder County. The ditch company has preferred (200 shares) and common (200 shares) shares, with the preferred shares being very senior and the common shares being very junior. In dry years, the junior shares yield very little, if any irrigation water. The Lower Boulder Ditch has an average annual diversion of 23.1 acre-feet per preferred share and 7.7 acre-feet per common share for the years 1950-2005 which are used for the average-year scenario. The Lower Boulder Ditch had an annual diversion of 17.9 acre-feet (22.5% reduction) per preferred share and 6.0 acre-feet (22.0% reduction) per common share in 2002 which are used for the drought-year scenario. This information was provided in the RWMP, 2007 and is summarized in Table D3 (Appendix D). Hydrographs illustrating the monthly

diversions in acre-feet for both scenarios/share types are shown on Figure D3 (Appendix D).

The approximate cost per preferred share is $190,000 and $30,000 per common share, which is equivalent to $8,300 and $3,900 per acre-foot, respectively. The Lower Boulder Ditch Company owns shares of Colorado Big Thompson (CBT) water which is uses to supplement deliveries of its common shares. Although the RWMP, 2007 identifies Lower Boulder Ditch preferred shares as a good raw water supply option, due to its seniority, location and cost per acre-foot, this ditch right has not been further evaluated as the source to support the raw water irrigation system in this Master Plan. This is due mainly to the cost of the shares per acre-foot and the difficulty in transferring this raw water to the proposed storage reservoir(s).

2.1.4 Rural Ditch

The Rural Ditch also has its head gate on Boulder Creek, located in Section 20, Township 2 North, Range 68 West of the 6th P.M., Weld County. The Rural Ditch Company has 50 shares, which deliver an average of 113.8 ac-ft per share for the years 1950-2005 which is used for the average-year scenario. The Rural Ditch had an annual diversion 100.8 acre-feet (11.4% reduction) per share in 2002 which is used for the drought-year scenario. The Rural Ditch has the largest diversion per share of the four irrigation ditches. This information was provided in the RWMP, 2007 and is summarized in Table D4 (Appendix D). Hydrographs illustrating the monthly diversions in acre-feet for both scenarios are shown on Figure D4 (Appendix D).

The approximate cost per share ranges from $800,000 to $1,000,000 according to the Rural Ditch rider, which is equivalent to $7,030 to $8,790 per acre foot. The RWMP, 2007 identifies the Rural Ditch as a raw water supply option to be considered on a case-by-case basis due to limited availability and the need for storage to irrigate in its off-peak delivery months. The report states that if shares become available to the Town through annexation, the Town should accept the Rural Ditch water to help diversify the Town's raw water portfolio. **For these reasons, this ditch right has not been further evaluated as the source to support the raw water irrigation system in this Master Plan.**

2.2 Irrigation Ditch Summary

The monthly and annual diversions for the average-year and drought-year scenarios are summarized in Table D5 (Appendix D) for all four irrigation ditches mentioned previously. The annual diversions and costs per share (and acre-foot) are summarized in Table 2.5, on the following page. Because the Coal Ridge Ditch and Lower Boulder Ditch were identified as the best options for a raw water supply: a comparison was prepared to show the percent distribution of the annual delivery per month. This comparison is shown in Table D6, and illustrates that both ditches have a similar delivery distribution. **Because these are similar, the Coal Ridge Ditch is used for further evaluations in this Master Plan.** Coal Ridge Ditch shares could be substituted with Lower Boulder

Ditch shares in the future, with the increase price per acre-foot and the ability to transfer this water to the Town's storage reservoirs being the main drawbacks.

Table 2.5 Irrigation Ditch Summary

Irrigation Ditch	Diversion Scenario[A]	Total Per Share (acre-ft)	Cost Per Share ($)	Cost Per acre-foot ($/acre-ft)
Coal Ridge Ditch	Average[1]	1.3	$7,500	$6,000
	Average[2002]	1.1	N/A	N/A
Highland Southside (Godding) Ditch	Average[1]	27.2	$177,000	$6,511
	Average[2002]	8.3	N/A	N/A
Lower Boulder Ditch	Average[P]	23.1	$190,000	$8,210
	Average[C]	7.7	$30,000	$3,889
	Average[2002P]	17.9	N/A	N/A
	Average[2002C]	6.0	N/A	N/A
Rural Ditch	Average[1]	113.8	$900,000	$7,907
	Average[2002]	100.8	N/A	N/A

[A]Refer to Tables D1 – D4 (Appendix D) for superscript explanations

2.3 Irrigation Ditch Water Rights Issues

The foundation of Colorado Water Law is based on the Prior Appropriation Doctrine, which implies "first in time, first in right." A water right with a priority date of 1863 is senior to a water right with a priority date of 1870. The use of all water in the State of Colorado is administered by the Office of the State Engineer. Their principle function is to ensure that historic water rights and decrees are maintained and that any change in the use or application of a new water right does not adversely impact vested senior water rights. The Colorado-Big Thompson water used by the Town in the potable water system was developed in the late 1930's. This water right has already been through the Water Court process within the State of Colorado and has its associated priority date. However, the water supplies anticipated to be utilized in the Raw Water Irrigation System will likely be subject to this process. Water right assessment and establishment is a very specialized discipline that is performed by consulting companies, including by Clear Water Solutions, Inc. whom the Town has engaged to oversee other raw water matters. Their continued services will be valuable to the Town as the Raw Water Irrigation System is established. The purpose of this section of the master plan is to give a brief overview of the process, timelines, and costs associated with the adjudication of a water right. As actual water rights become available to the Town, it is recommended that Clear Water Solutions be engaged to assess the rights and chart a course to obtain a decreed right through Water Court for their use in the system.

Water that will be available to the Town has a historic use that will vary depending on its source. Part of the water rights assessment process is to establish two principle components of the historic use; 1) where was the water used, and 2) what was it used for. If water had been historically used to irrigate crops on a farm but the intention now is to use that water to irrigate a park in another location, the water right is effectively being changed and must be modified under

the laws of Colorado. For virtually all of the available raw water supplies that the Town would be able to utilize, the historic use was irrigation of cultivated crops and is described as a "direct flow" right. This simply means that the water is taken directly from river, diverted through the ditch system and applied to the irrigated crop. Colorado Water Law allows for only 72 hours of storage before the water must be diverted for its decreed irrigation use. The reason for this is to eliminate an expansion of use, which in this case, is the loss of water introduced due to evaporation and the changing of return flow patterns. If the water is stored for more than 72 hours, then you are effectively causing an expansion of use and the water right must be modified under the laws of Colorado. Additionally, what the water was historically used to irrigate versus what is intended to irrigate can initiate a change of the use.

The Raw Water Irrigation System proposed by this master plan will certainly involve a change of use or location of use of the local water rights and will require a formal application through Water Court. This is accomplished in two steps that involve the State Engineer's Office and Colorado Water Court. To change a water right, an application to Water Court is required. This is a legal process that adjudicates a right and gives the water right owner legal authority to use the water for the purpose stated in the Water Court application. Once decreed, the water right owner is required to only use the right under the specific terms and condition of the decree. The purpose of the terms and conditions is to ensure that other water rights are not adversely affected.

For example; The Town's system will utilize extended storage in ponds for two purposes. The primary purpose is to allow the Town to take water whenever the ditch system can deliver it and then store it until it is needed for irrigation. In addition, the storage ponds will likely be utilized for recreational/aesthetic opportunities. Storage of the water beyond 72 hours will result in evaporative losses that diminish the water that would have normally made it back into the river system. That loss is not acceptable to downstream water rights so that loss must be augmented, or replaced. To accomplish augmentation the evaporative loss must be determined and an equal amount of water sent back into the river system. If the Town owns 100 acre-feet of raw water but 15 acre-feet is lost to evaporation every year, the Town will actually only yield 70 acre-feet of usable water. Under that scenario 15 acre-feet is lost to evaporation and another 15 acre-feet must be used to replenish the river system. In addition, changes in timing of return flows will need to be considered.

The Water Court process can take many years to complete and receive a Court-decreed water right. During that period the Town can proceed with an interim, temporary plan on an annual basis. This is called a Substitute Water Supply Plan. It is structured similar to a Plan for Augmentation through Water Court and is reviewed by the State Engineer. Once approved, this plan will allow the Town to proceed with use of the system. The Substitute Water Supply Plan can be approved for up to 5 years. The intent of the 5-year window is to allow applicants to operate under the State Engineer while the Water Court process plays out. The idea is that by the end of the 5 years, a decree will be entered by the Court. If the Court has not entered a decree by that point, continued approval on a year-to-year basis can be granted so long as adequate due diligence can be shown. Inadequate diligence is cause for the Town's case to be thrown out and the irrigation system to be shut down. Clear Water Solutions can help to ensure this does not happen.

The Water Court process timing and costs are very difficult to accurately predict as third party objectors are involved. For the purposes of this master plan it recommended that 7 years and $150,000.00 be anticipated for the Water Court process. The principle costs associated with this process are the consultant and legal fees incurred in defending the Town's case with any objectors in the river system. Typically there are water rights owners that will demand a closer examination of the Town's engineering and the impact of the Town's proposed plan on their water rights. These defenses involve both evaluation and negotiation and can be very time consuming. The Substitute Water Supply Plan also has a number of variables involved but is a somewhat more predictable process. For purposes of this master plan it is recommended that 7 months and $30,000 be anticipated for the Substitute Water Supply Plan process. The principle costs associated with this process are the consultant fees incurred to assess the water right and prepare the plan. This can take up to 4 months and is then submitted to the Office of the State Engineer for their review. The State's review and approval process can take up to 3 months.

It should be noted that this process (or some component of it) will apply every time the Town secures and wishes to change the use or location of use of a water right. For that purpose it is further recommended that the Town strategically plan acquisition of raw water rights so that several rights can be processed simultaneously with a Water Court application to limit Water Court Amendments. Each time the Town amends its court case, it opens the door to additional objectors. Limiting this will help control the substantial cost of obtaining decreed rights for use in the Raw Water Irrigation System.

3 Evaluate Potential Storage Reservoirs

3.1 General Information

The irrigation system will consist of diverting the raw water from the irrigation ditch (inflow), transferring it to a temporary storage reservoir, and distributing (outflow) it to the various parks and open spaces for irrigation. A storage reservoir will be necessary to balance the irrigation inflow and outflow, since the flow rates change over time and vary from each other. The storage reservoir will ensure that there is enough raw water to distribute to the parks and open spaces to satisfy the irrigation requirement. This is further explained in the following subsections.

Also, as previously discussed, there are a number of potential inflow sources that could be used individually or (more likely) in combination to meet the irrigation demand. **For purposes of simplifying this evaluation, Coal Ridge Ditch supply parameters were used to determine inflow.**

3.2 Firestone Central Park Storage Reservoir

Firestone Central Park was chosen as a preferred location for a main storage reservoir and distribution point for the Town's raw water system. The park is centrally located within the Town of Firestone and the conceptual plan for the park includes a series of amenity ponds. The CPIMP, 2006 provided preliminary pond locations, sizes, and depths which have been used as a basis for the evaluation in this Master Plan.

3.2.1 Location and Preliminary Configuration

Figure 3.1.1 shows the configuration of three proposed reservoirs at Firestone Central Park, within Park Avenue. This configuration was included in the updated Preliminary Development Plan (PDP) for this site. Although the layout differs from the initial plan (CPIMP, 2006), the concept is similar. These reservoirs would be hydraulically connected with a series of streams and a pump that would re-circulate the water. Each reservoir shall be to be approximately eight feet deep, with the top three feet being available for raw water irrigation storage. Figure E1 (Appendix E) illustrates a typical cross-section. The layout presented in this Master Plan assumes that the existing gas and oil facilities located at Central Park will still be in place when the ponds are constructed.

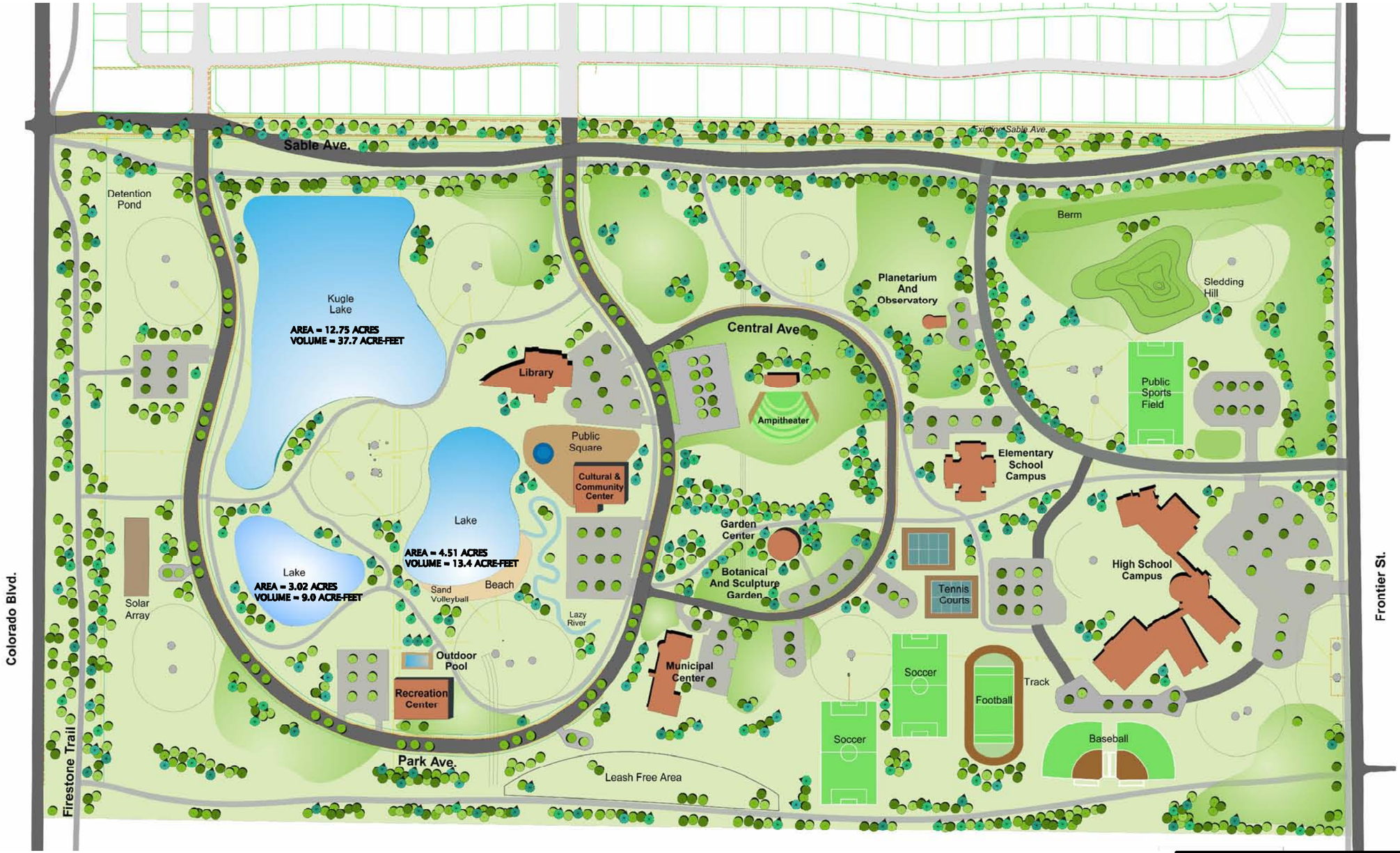

N

0 200 400
scale 1" = 400' feet

FIRESTONE
A COMMUNITY IN MOTION

DATE	REVISION DESCRIPTION

CCG COLORADO CIVIL GROUP, INC.
ENGINEERING CONSULTANTS
1413 W. 29TH STREET
LOVELAND, COLORADO 80538
(970) 278-0029

TOWN OF FIRESTONE
RAW WATER IRRIGATION SYSTEM MASTER PLAN
FIGURE 3.1.1
FIRESTONE CENTRAL PARK - PDP

FILENAME: RWMP FCP FIGURE
DESIGNED: C.E.M.
CHECKED: D.S.L.
JOB NO.: 0668.0149.00
SCALE: 1" = 400'
DATE: DECEMBER 2009

SHEET NO.: 1 OF 1

3.2.2 Storage Volume Calculations

Using the design constraints shown on Figures 3.1.1 and E1, an initial available raw water storage volume was determined, based on a total surface area of 20.26 acres . This area was used as a starting point in evaluating the functionality of the Firestone Central Park irrigation reservoirs. The volume in the irrigation reservoir(s) will fluctuate to balance the varying inflow from the raw water source(s), the varying irrigation demand that will be pumped into the distribution system, and the losses due to evaporation. The Central Park irrigation reservoir(s) will be lined with clay or a synthetic material so infiltration losses were assumed to be negligible.

A spreadsheet model was created to balance these conditions and calculate the irrigation reservoir water level information. To simplify calculations for evaporation, volume, and water level, the spreadsheet model assumed one circular pond rather than several irregularly shaped ponds. The irrigation reservoir stage-storage parameters are listed in Table E1 (Appendix E). The number of Coal Ridge Ditch shares was adjusted in the spreadsheet to meet the reservoir water level requirements and provide irrigation for the parks and open spaces. The number of shares was adjusted to maintain a water depth at minimum of 5 feet deep. If the irrigation ditch shares filled the reservoir in excess of 8 feet, then this was considered excess inflow (volume shortage). This volume shortage is considered a loss since the irrigation reservoirs cannot physically store this water at Firestone Central Park.

The combination of multiple raw water irrigation sources, unlimited irrigation storage reservoir configurations, and the phasing of infrastructure improvements create an infinite number of possible solutions for the raw water irrigation system. The following scenarios were evaluated to determine the volume of irrigation inflow required to support the irrigation system:

- Priority 1 Parks, Average Year Scenario
- Priority 1 Parks, Drought Year Scenario
- Priority1-3 Parks, Average Year Scenario
- Priority 1-3 Parks, Drought Year Scenario

The Priority 1 Parks, Average Year Scenario will require 302 Coal Ridge Ditch shares to meet the irrigation demands and keep the Central Park irrigation reservoirs within the 5 to 8 feet operating range. The results from this scenario can be found in Table E2 and Figure E2 (Appendix E). The results of these calculations indicate that approximately 38.2 acre-feet (approximately 10.1%) of raw water cannot be utilized by the Central Park irrigation reservoirs or the distribution system.

The Priority 1 Parks, Drought Year Scenario will require 409 Coal Ridge Ditch shares to meet the irrigation demands and keep the Central Park irrigation reservoir within the 5 to 8 feet operating range. The results from this scenario can be found in Table E3 and Figure E3 (Appendix E). The results of these calculations indicate that approximately 38.7 acre-feet (approximately 9.0%) of raw water cannot be utilized by the Central Park irrigation reservoirs or the distribution system.

The Priority 1-3 Parks, Average Year Scenario will require 879 Coal Ridge Ditch shares to meet the irrigation demands and keep the Central Park irrigation reservoir within the 5 to 8 feet

operating range. The results from this scenario can be found in Table E4 and Figure E4 (Appendix E). The results of these calculations indicate that approximately 425.0 acre-feet (approximately 38.7%) of raw water cannot be utilized by the Central Park irrigation reservoirs or the distribution system. This amount of excess raw water illustrates the need for additional irrigation reservoirs as the distribution system is expanded to serve the Priority 2-3 Parks.

The Priority 1-3 Parks, Drought Year Scenario will require 1,086 Coal Ridge Ditch shares to meet the irrigation demands and keep the Central Park irrigation reservoir within the 5 to 8 feet operating range. The results from this scenario can be found in Table E5 and Figure E5 (Appendix E). The results of these calculations indicate that approximately 351.4 acre-feet (approximately 30.8%) of raw water cannot be utilized by the Central Park irrigation reservoirs or the distribution system. As mentioned above, this amount of excess raw water illustrates the need for additional irrigation reservoirs as the distribution system is expanded to serve the Priority 2-3 Parks

Each of the four scenarios listed above include approximately 69.2 acre-feet of evaporative losses from the Central Park irrigation reservoir. The evaporative losses were based on the annual gross evaporation of 41.0 inches provided by Clear Water Solutions, Inc. The monthly and annual evaporative loss supporting data can be found in Table E6 and Figure E6 (Appendix E).

In each of the scenarios, there is an excess inflow of raw water to the Central Park storage reservoirs. This is due to the inflow hydrographs for the irrigation ditches. During months with lower irrigation demands and higher raw water delivery rates, the pond fills to capacity and cannot store any additional water. For purposes of this Master Plan, the excess inflow is raw water in addition to what can be stored and is essentially unusable. There may be opportunities to store this excess inflow in other irrigation reservoirs discussed in the following sections. Moving this inflow to multiple storage reservoirs will allow all raw water rights owned by the Town of Firestone to be put to a beneficial use. Additional storage opportunities are discussed in Sections 3.3 and 3.4 of this Master Plan. This excess water could be used in drought years to supplement any shortages in raw water supply or for augmentation that would be required by the Town based on the State's Water Court process.

3.2.3 Raw Water Acquisition Opinion of Cost

In order to determine the costs associated with the raw water acquisition, the Priority 1 Parks, Drought Year Scenario will be recommended as the first planning step for the Town of Firestone. This scenario requires 409 shares (Table E3) of the Coal Ridge Ditch to meet irrigation demands and evaporative losses. The State of Colorado will require another 66 shares (69.2 acre-feet @ 1.05 acre-feet per share) of the Coal Ridge Ditch to augment the evaporative losses, which is explained in Section 2.3. The Coal Ridge Ditch shares are valued at $7,500 per share, which is equivalent to a raw water acquisition cost of $3,562,500 for 475 shares. The additional Coal Ridge Ditch shares to be dedicated to the Town of Firestone (VL-NPIR, 2005) were not deducted from this figure since they have minimal impact during the drought year. In addition to the cost for the Coal Ridge Ditch shares, legal fees and expenses will be incurred to allow this raw water

to be used for a municipal irrigation system, which are identified in Section 2.3. The anticipated costs associated with the raw water acquisition are summarized in Table 3.1 below:

Table 3.2.3 Opinion of Cost

Item No.	Description	Unit	Estimated Quantity	Unit Price	Cost
1	**RAW WATER ACQUISITION**				
a	COAL RIDGE DITCH SHARES-IRRIGATION	EA.	409	$7,500.00	$3,067,500.00
b	COAL RIDGE DITCH SHARES-AUGMENTATION	EA.	66	$7,500.00	$495,000.00
c	WATER COURT PROCESS	L.S.	1	$150,000.00	$150,000.00
d	SUBSTITUTE WATER SUPPLY PLAN PROCESS	L.S.	1	$30,000.00	$30,000.00
				RAW WATER ACQUISITION SUBTOTAL	**$3,742,500.00**

PROJECT SUBTOTAL	**$3,742,500.00**
PROJECT CONTINGENCY (20%)	**$748,500.00**
PROJECT TOTAL	**$4,491,000.00**

3.3 Vogl North Subdivision Storage Reservoir

A raw water irrigation system is being designed as part of the Vogl Land – North Parcel development. This system will also serve the Vogl Land – South Parcel in the future. The Town will own and maintain the irrigation system from the proposed pond to each of two Points of Connection (POC) that will also be owned and maintained by the Town. The owners of the Vogl Land development own 144 shares of Coal Ridge Ditch Company stock. Upon development of the North Parcel, 84 shares will be dedicated to the Town along with 4 shares of CBT water. The Town will develop a raw water rate that will be charged to the Vogl Land HOA for its use of the irrigation water. The system has been designed with the assumption that the additional 60 shares of Coal Ridge Ditch Company stock will be dedicated with the development of the Vogl Land – South Parcel.

The water rights associated with the Vogl Land development are direct flow water rights, which means that there are no storage rights associated with the shares. For this reason, the Vogl pond has been designed with a three-day (72-hour) storage limit. Additionally, the pond was designed to serve only the Vogl Land development, which means that the Town would not be able to use this pond for storage. The Town's raw water irrigation system will utilize this pond in the interim condition, as a transfer point to distribute raw water to storage reservoirs located at Firestone Central Park. In the future, a head gate may be constructed near the Town of Firestone Public Works facility which would divert the Town's raw water from the Coal Ridge Ditch to the Central Park storage reservoir.

3.4 Gravel Pit Storage Reservoirs

As mentioned previously in Section 3.2.2, there may be a need to store excess raw water for drought year supplement and/or for augmentation purposes. One option would be to utilize existing gravel pits located near or along the St. Vrain River. This would be an ideal location

due to the proximity to the river where the water would be released for augmentation and because the excess water could likely be piped to the gravel pits without being pumped. An additional irrigation line and pump station would be required to transfer water from this area back to Firestone Central Park. Since the Town does not own the gravel pits, an agreement would have to be negotiated with the owner(s) to allow the Town to store water in the gravel pit reservoirs.

4 Raw Water System Transfer Designs

The main function of the Transfer Pump (TP) station is to move the raw water from the irrigation ditch or other raw water source to the Firestone Central Park storage reservoirs. Because the TP station may transfer the irrigation water directly from an irrigation ditch, it is designed to pump at a constant flow rate, unlike the distribution system which will pump at higher, variable flow rates over a shorter period of time. Using a constant flow rate should make raw water delivery more predictable and easier to coordinate with the individual ditch companies. Since the TP station will include the installation of a pump station and force main, it should be sized to support the Priority 1-3 parks to avoid being retrofitted in the future.

The TP station must be capable of meeting the maximum irrigation demands to keep the storage reservoir above the minimum water level, which occurs during the month of July. The monthly demands in acre-feet for the Priority 1, 2, and 3 parks were taken from Tables C8, C9, and C10 (Appendix C), respectively. For the month of July, the monthly irrigation demands are calculated as follows:

$$July\ Demand\ (acre - ft) = Priority\ 1 + Priority\ 2 + Priority\ 3$$

$$Average\ Year\ (acre - ft) = 56.8\ + 27.1 + 44.5 = \ 128.4\ \mathrm{acre - ft}$$

$$Drought\ Year\ (acre - ft) = 71.4\ + 34.1 + 55.9 = 161.4\ acre - ft$$

An additional 10 acre-feet was added to these volumes to account for Firestone Central Park storage reservoir evaporative losses during the month of July. The approximate evaporative losses were taken from Table E2 (Appendix E). Setting the constant flow rate at 1,250 gpm will allow the TP station to provide the raw water supply for any month during the average year and drought year scenarios. Detailed calculations for all three scenarios can be found in Appendix F.

Because the Coal Ridge Ditch has been identified as the preferred raw water irrigation supply, two TP station options have been evaluated to use this resource. The first option involves pumping the raw water from the Vogl irrigation storage reservoir that will be incorporated into the development. The second option includes pumping the raw water directly from the irrigation ditch at the Town of Firestone Public Works Facility. The details for both of these options are listed in the following sections.

4.1 Transfer Pump Station Evaluation (Vogl)

Installing a TP station at this location may be beneficial because it could be installed to pump from an irrigation storage reservoir that will be constructed with the Vogl North development. The TP station (TP-1) would pump the raw water in a force main along Firestone Boulevard, Frontier Street, Sable Avenue, to the Central Park Storage Reservoir as depicted on Figure 4.1. This alternative would require a force main with a length of approximately 12,135 feet and pump against an estimated elevation difference of 65 feet. Based on the calculations presented in Table F1 (Appendix F), this TP station would require a pump with a capacity of 1,250 gpm @ 130 feet Total Dynamic Head (TDH).

These parameters can be met by an ITT Flygt submersible pump with an 88 horsepower (hp) motor. This is based on the pump data provided Lee Mathews Equipment, Inc. in Appendix F. At this operating point, this specific pump has an efficiency of 63.4%. The advantages and disadvantages for this option are as follows:

Advantages

- Pumping from a storage reservoir will allow suspended solids to settle out prior to the transfer.
- Vertical turbine pumps may be an option which can operate more efficiently.
- The force main is shorter in length.

Disadvantages

- The transfer pump has greater TDH requirement resulting in larger, more expensive pumps that consume more power.
- This alternative is dependent on the Vogl development

4.2 Transfer Pump Station Evaluation (Public Works Facility)

The Coal Ridge Ditch runs along the south property line of the Town of Firestone Public Works Facility, located at 7500 Weld County Road 20. Installing a TP station at this location would be beneficial because it could be installed on property already owned by the Town. The TP station (TP-2) would pump the raw water in a force main along the west property line of the Public Works Facility, Pine Cone Avenue (W.C.R. 20), Frontier Street, and Sable Avenue to the Central Park storage reservoir as depicted on Figure 4.2. This alternative would require a force main with a length of approximately 12,925 feet and pump against an estimated elevation difference of 12 feet. Based on the calculations presented in Table F2 (Appendix F), this TP station would require a pump with a capacity of 1,250 gpm @ 80 feet TDH. These parameters can be met by an ITT Flygt submersible pump with a 47 hp motor. This is based on the pump data provided Lee Mathews Equipment, Inc. in Appendix F. At this operating point, this specific pump has an efficiency of 47.5%. The advantages and disadvantages for this option are as follows:

Advantages

- Property is owned by the Town of Firestone.
- The elevation difference is reduced resulting in smaller pump motor(s) and less power consumption.

Disadvantages

- The force main has greater length
- Since the pump will be transferring raw water directly out of the irrigation ditch, there will be more suspended solids which will be transferred to the Firestone Central Park storage reservoir(s), which will require additional maintenance.

4.3 Transfer System Design Criteria

Adopted regulations and criteria are preferred to ensure consistency and compatibility between the multiple components of the raw water irrigation system. The transfer pump station(s) shall meet the following criteria at a minimum:

1. The raw water irrigation pump station location shall be approved by the Town of Firestone. The pump station shall be located on property that is owned or will be conveyed to the Town of Firestone. The pump station shall be located outside any regulatory floodplain and at least 18 inches above the water surface for the 100-year design storm.

2. The raw water irrigation pump station site and facility should be adequately sized to allow convenient access for operation and maintenance. The pump station shall be accessible from public right-of-way via an all weather access.

3. The pump system shall be designed with multiple pumps, each equipped with a variable frequency drive (VFD). The pumps shall be vertical turbines when pumping from a storage reservoir and rail mounted submersibles when pumping directly from an irrigation ditch. The pump system shall include one additional pump that is regularly engaged in the pumping cycle to ensure that all pumps experience similar run times. The additional pump shall be sized to allow for any single pump to be taken out of service for repair or maintenance without reducing the capacity of the pump system. All pump stations shall include a wet-well design with an intake pipe and isolation valve.

4. Pump systems shall have a capacity of not less than one-hundred and twenty percent (120%) of the irrigation demand while maintaining the minimum delivery pressure. Pump efficiency shall be a minimum eighty percent (80%) at the design operating point, whenever possible.

5. The pumping system shall be designed to function in an outdoor environment and have enclosures and covers as required for proper operation and maintenance of the system. The pump system design shall include a skid or rail assembly to support all pump components during shipment and to serve as the installed mounting base. The skid or rail assembly shall be of sufficient size to handle hydraulic forces and support the full weight of all mounted components.

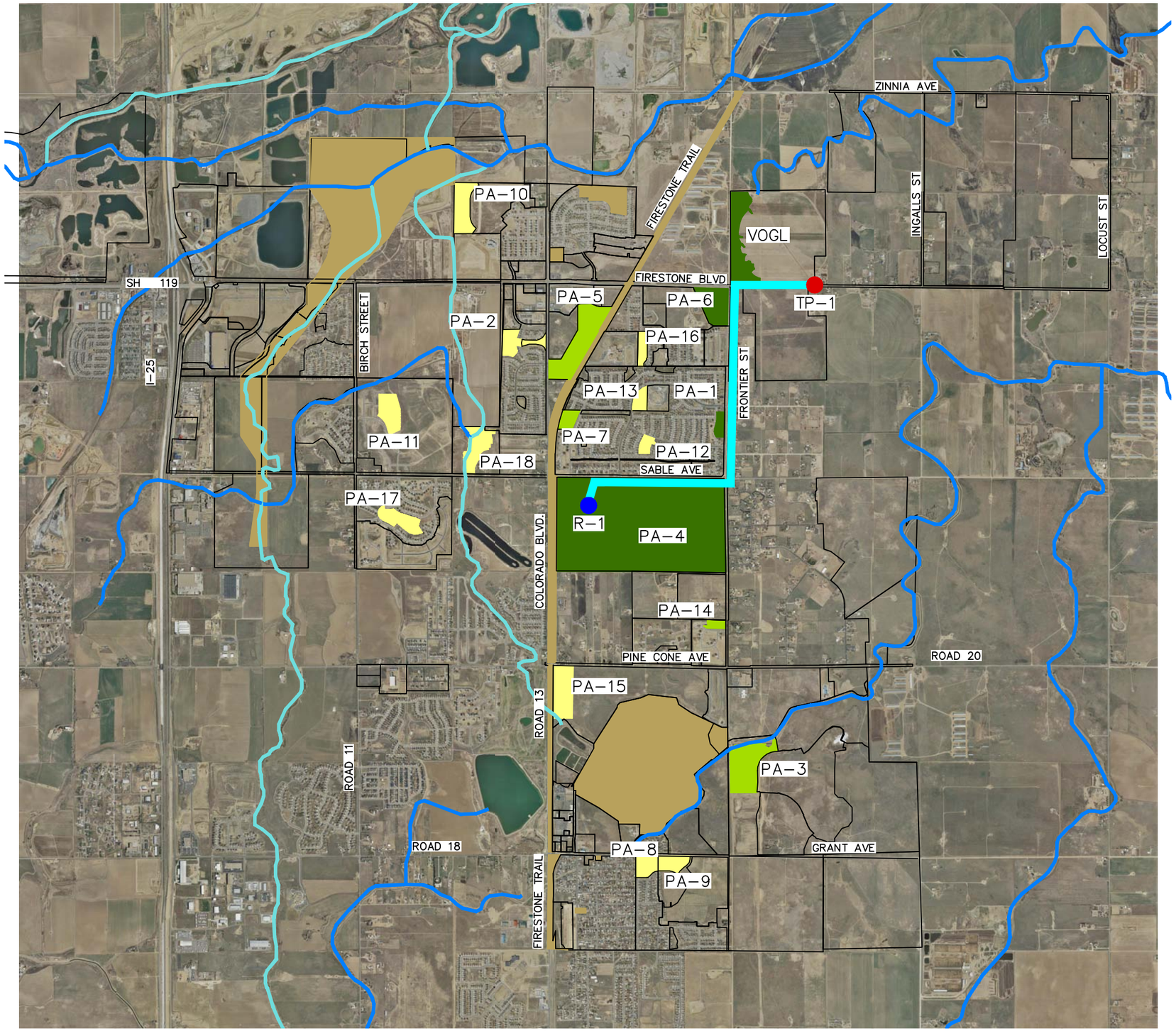

LEGEND

- PRIORITY 1
- PRIORITY 2
- PRIORITY 3
- AREA NOT INCLUDED
- EXISTING DRAINAGE WAY
- EXISTING DITCH
- J–4 DEMAND JUNCTION
- R–1 STORAGE RESERVOIR
- TP–1/PS–1 PUMP STATION
- 12–INCH FORCE MAIN
- 6–INCH DISTRIBUTION LINE
- 8–INCH DISTRIBUTION LINE
- 12–INCH DISTRIBUTION LINE
- 18–INCH DISTRIBUTION LINE

PARK INFORMATION

PARK I.D.	PARK NAME
PA-1	AISIK'S MEADOW PARK
PA-2	BOOTH FARMS PARK
PA-3	COMMUNITY PARK
PA-4	FIRESTONE CENTRAL PARK
PA-5	FIRESTONE REGIONAL PARK
PA-6	FIRESTONE SPORTS COMPLEX
PA-7	HARNEY PARK
PA-8	HART PARK
PA-9	HART PARK EXPANSION
PA-10	MOUNTAIN SHADOWS PARK
PA-11	NEIGHBORS POINT PARK
PA-12	PATTERSON PARK
PA-13	PRAIRIE RIDGE PARK
PA-14	SADDLEBACK HEIGHTS PARK
PA-15	SADDLEBACK PARK
PA-16	SAGEBRUSH PARK
PA-17	STONERIDGE PARK
PA-18	SABLE GLEN PARK

N

0 1500 3000
scale 1" = 3000' feet

FIRESTONE
A COMMUNITY IN MOTION

DATE	REVISIONS REVISION DESCRIPTION

CCG COLORADO CIVIL GROUP, INC. ENGINEERING CONSULTANTS
1413 W. 29TH STREET LOVELAND, COLORADO 80538 (970) 278-0029

TOWN OF FIRESTONE
RAW WATER IRRIGATION SYSTEM MASTER PLAN
FIGURE 4.1
TRANSFER PUMP STATION EVALUATION (VOGL)

FILENAME: RWIMP FIGURES
DESIGNER: C.E.M.
CHECKED: D.S.L.
JOB NO.: 0668.0149.00
SCALE: 1" = 3000'
DATE: DECEMBER 2009
SHEET NO.: 1 OF 1

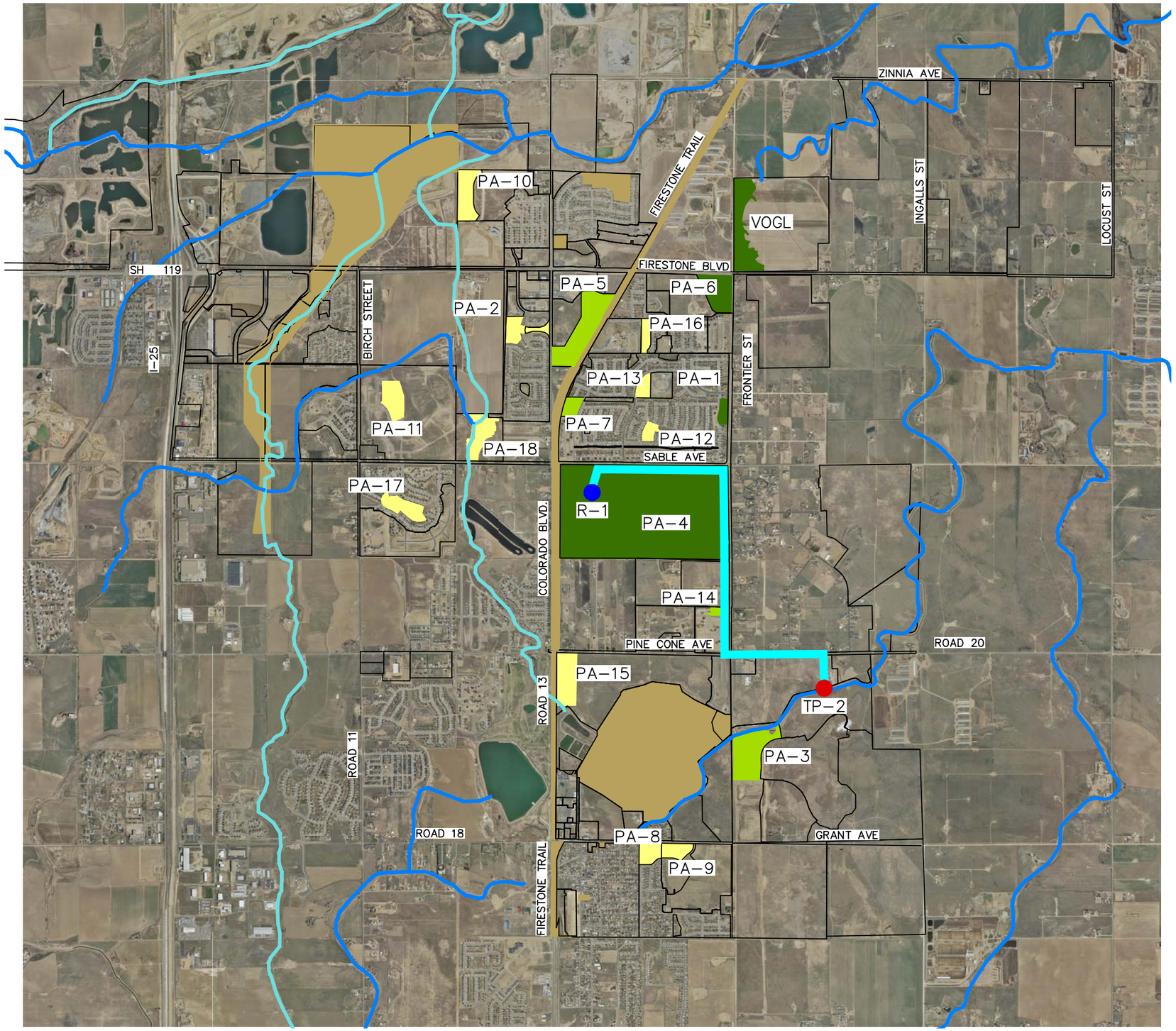

LEGEND

- PRIORITY 1
- PRIORITY 2
- PRIORITY 3
- AREA NOT INCLUDED
- EXISTING DRAINAGE WAY
- EXISTING DITCH
- J-4 DEMAND JUNCTION
- R-1 STORAGE RESERVOIR
- TP-1/PS-1 PUMP STATION
- 12-INCH FORCE MAIN
- 6-INCH DISTRIBUTION LINE
- 8-INCH DISTRIBUTION LINE
- 12-INCH DISTRIBUTION LINE
- 18-INCH DISTRIBUTION LINE

PARK INFORMATION

PARK I.D.	PARK NAME
PA-1	AISIK'S MEADOW PARK
PA-2	BOOTH FARMS PARK
PA-3	COMMUNITY PARK
PA-4	FIRESTONE CENTRAL PARK
PA-5	FIRESTONE REGIONAL PARK
PA-6	FIRESTONE SPORTS COMPLEX
PA-7	HARNEY PARK
PA-8	HART PARK
PA-9	HART PARK EXPANSION
PA-10	MOUNTAIN SHADOWS PARK
PA-11	NEIGHBORS POINT PARK
PA-12	PATTERSON PARK
PA-13	PRAIRIE RIDGE PARK
PA-14	SADDLEBACK HEIGHTS PARK
PA-15	SADDLEBACK PARK
PA-16	SAGEBRUSH PARK
PA-17	STONERIDGE PARK
PA-18	SABLE GLEN PARK

N

0 1500 3000
scale 1" = 3000' feet

FIRESTONE
A COMMUNITY IN MOTION

REVISIONS
DATE | REVISION DESCRIPTION

CCG COLORADO CIVIL GROUP, INC. ENGINEERING CONSULTANTS
1413 W. 29TH STREET
LOVELAND, COLORADO 80538
(970) 278-0529

TOWN OF FIRESTONE
RAW WATER IRRIGATION SYSTEM MASTER PLAN
FIGURE 4.2 - TRANSFER PUMP STATION EVALUATION (PUBLIC WORKS)

FILENAME: RWIMP FIGURES
DESIGNED: C.E.M.
CHECKED: D.S.L.
JOB NO.: 0668.0149.00
SCALE: 1" = 3000'
DATE: DECEMBER 2009
SHEET NO.: 1 OF 1

8. Additional pump system design components shall include, but not be limited to, motors, valves, gauges, mounting and support structures, power and electrical equipment, control systems, operator interface devices, alarms, supervisory control and data acquisition (SCADA) systems, monitoring devices, building requirements, installation and operation instructions, and recommended maintenance procedures.

9. The Construction Drawings for the irrigation pumping system shall show a typical layout, elevation and plan views, and critical dimensions for the pump system, building, wet well, etc. The pump system manufacturer and project engineer are responsible for the layout and design of the pump system supplied and any special coordination issues that affect the critical dimensions, layout or orientation of the pump system.

4.4 Transfer System Opinions of Cost

An Opinion of Cost was prepared for both TP Station options. Table 4.4.1 has an estimated cost of $1,130,730 for the Vogl TP station and Table 4.4.2 lists an estimated cost of $1,142,610 for the Public Works Facility alternative.

Table 4.4.1 TP station Opinion of Cost (Vogl)

Item No.	Description	Unit	Estimated Quantity	Unit Price	Cost
1	**TRANSFER PUMP PIPE SYSTEM**				
a	12-INCH PIPE (C900-DR25)	L.F.	12,135	$45.00	$546,075.00
b	ENERGY DISSIPATION STRUCTURE	L.S.	1	$2,500.00	$2,500.00
				TRANSFER PUMP PIPE SUBTOTAL	**$548,575.00**
2	**TRANSFER PUMP STATION**				
a	INTAKE STRUCTURE	EA.	1	$7,500.00	$7,500.00
b	PUMP STATION (1,800 GPM)	L.S.	1	$100,000.00	$100,000.00
c	SCADA & COMMUNICATION PACKAGE	L.S.	1	$45,000.00	$45,000.00
d	UNITED POWER ELECTRICAL SERVICE	L.S.	1	$65,000.00	$65,000.00
				TRANSFER PUMP STATION SUBTOTAL	**$217,500.00**

CONSTRUCTION SUBTOTAL	**$766,075.00**
CONSTRUCTION CONTINGENCY (20%)	**$153,215.00**
CONSTRUCTION TOTAL	**$919,290.00**
ENGINEERING & DESIGN (8%)	**$73,543.20**
CONSTRUCTION ADMINSTRATION & TESTING (15%)	**$137,893.50**
PROJECT TOTAL	**$1,130,726.70**

The Vogl TP station is slightly less expensive due to the force main length and the simpler intake structure. The Public Works Facility TP station has a less expensive pump station, however not enough to offset the additional cost of the force main. Because these opinions of costs are very similar, either option would be a viable alternative. The selection of either alternative may be dictated by the preference of the Coal Ridge Ditch Company and/or the status of the Vogl development.

Table 4.4.2 TP station Opinion of Cost (Public Works Facility)

Item No.	Description	Unit	Estimated Quantity	Unit Price	Cost
1	**TRANSFER PUMP PIPE SYSTEM**				
a	12-INCH PIPE (C900-DR25)	L.F.	12,925	$45.00	$581,625.00
b	ENERGY DISSIPATION STRUCTURE	L.S.	1	$2,500.00	$2,500.00
				TRANSFER PUMP PIPE SUBTOTAL	**$584,125.00**
2	**TRANSFER PUMP STATION**				
a	INTAKE STRUCTURE	EA.	1	$10,000.00	$10,000.00
b	PUMP STATION (1,800 GPM)	L.S.	1	$75,000.00	$70,000.00
c	SCADA & COMMUNICATION PACKAGE	L.S.	1	$45,000.00	$45,000.00
d	UNITED POWER ELECTRICAL SERVICE	L.S.	1	$65,000.00	$65,000.00
				TRANSFER PUMP STATION SUBTOTAL	**$190,000.00**

CONSTRUCTION SUBTOTAL	**$774,125.00**
CONSTRUCTION CONTINGENCY (20%)	**$154,825.00**
CONSTRUCTION TOTAL	**$928,950.00**
ENGINEERING & DESIGN (8%)	**$74,316.00**
CONSTRUCTION ADMINSTRATION & TESTING (15%)	**$139,342.50**
PROJECT TOTAL	**$1,142,608.50**

5 Raw Water Distribution System Design

It is intended that all Priority 1-3 park areas will eventually be irrigated by a distribution system that will originate at and be supplied by the Central Park irrigation reservoir. As discussed in Section 1.4, the areas were prioritized based on their current status and location relative to Central Park. Because the distribution system infrastructure will be designed and constructed from the center out to the extents of the system, it has been designed to provide service to all Priority 1-3 park areas. The infrastructure improvements associated with the Priority 2 system will support the Priority 3 system and the infrastructure improvements associated with the Priority 1 system will support the Priority 2 and 3 systems.

5.1 Distribution System Alignment Evaluation

The distribution system was generally aligned along and through existing and future public streets, public parks, open space areas, and other similar corridors. The distribution system was laid out with the intent of providing service to all Priority 1-3 Parks while minimizing the amount of infrastructure required. The Priority 1, 2, and 3 distribution system infrastructure requirements are shown in Figures 5.1.1, 5.1.2, and 5.1.3, respectively.

5.2 Pump and Distribution System Modeling

The distribution pump (DP) station and pipe network has been sized to meet the irrigation application rates which are dependent on the irrigation demands presented in Section 1.5, Section 1.6, and Appendix C. The DP station is identified as PS-1 on Figures 5.1.1 - 5.1.3. The application rate is different from the irrigation demand with respect that the water has to be applied to the turf in a limited amount of time. Typically, the parks and open spaces are irrigated at night so that the watering will not interfere with the use of the park. The pipe sizes and pump total dynamic head (TDH) were set so that the minimum dynamic system pressure is 70 psi and the maximum pipe velocity in the distribution system is less than 5 feet per second. All of the distribution pipes were modeled as P.V.C. with a Hazen-Williams C value of 130. The DP station and pipe network were modeled for all three scenarios using the WaterCAD V8 software package. The results from this modeling effort can be found in Appendix G.

The pump station and distribution system has been evaluated for the Priority 1-3 parks for both scenarios previously discussed in this Master Plan which includes the following:

1. Average Year Scenario
2. Drought Year Scenario

The amount of time allowed for irrigation has been adjusted so that the application rates are similar for both scenarios. The modeling results for each scenario are listed in Sections 5.2.1 – 5.2.2.

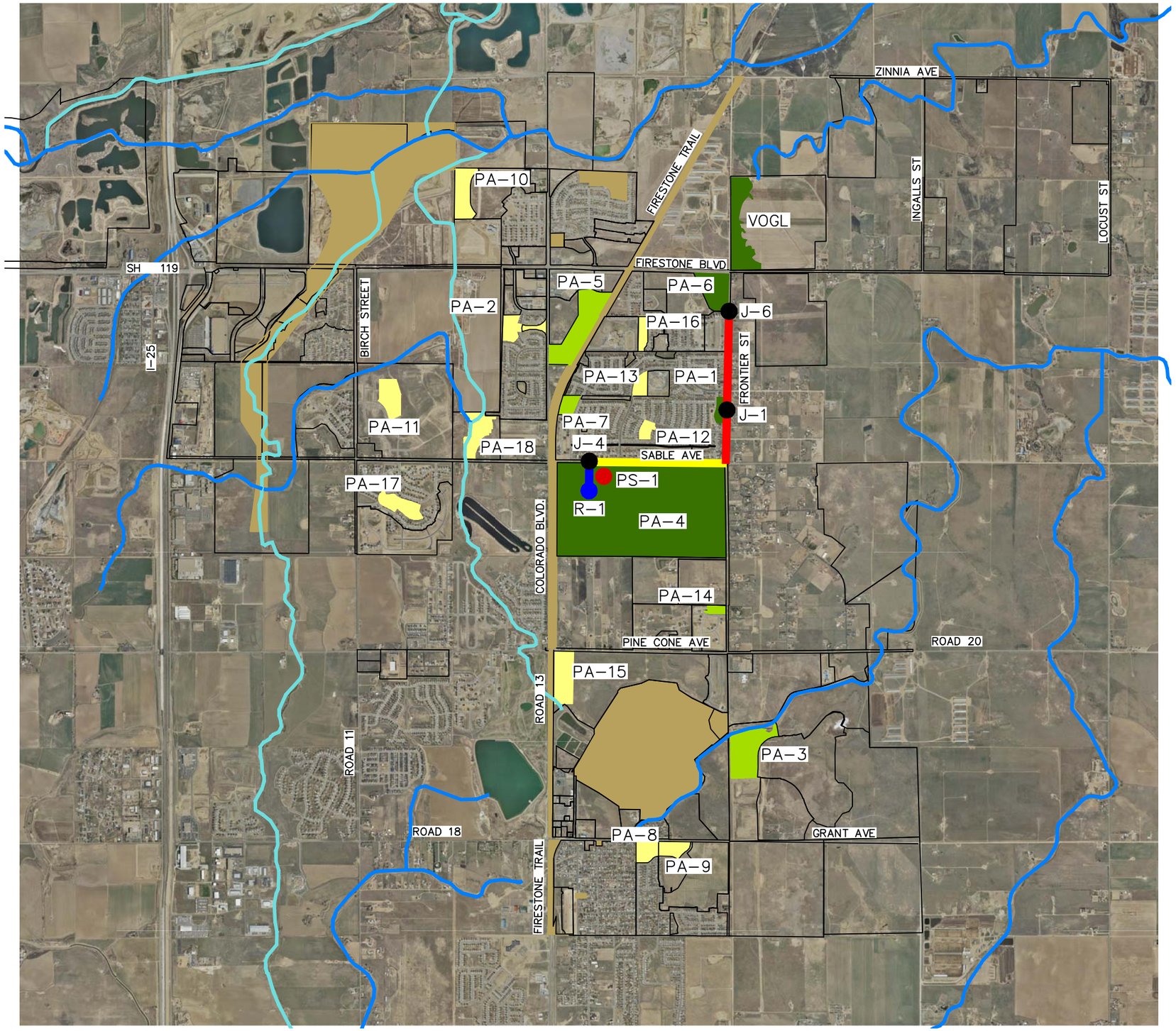

LEGEND

- PRIORITY 1
- PRIORITY 2
- PRIORITY 3
- AREA NOT INCLUDED
- EXISTING DRAINAGE WAY
- EXISTING DITCH
- J–4 DEMAND JUNCTION
- R–1 STORAGE RESERVOIR
- TP–1/PS–1 PUMP STATION
- 12–INCH FORCE MAIN
- 6–INCH DISTRIBUTION LINE
- 8–INCH DISTRIBUTION LINE
- 12–INCH DISTRIBUTION LINE
- 18–INCH DISTRIBUTION LINE

PARK INFORMATION

PARK I.D.	PARK NAME
PA-1	AISIK'S MEADOW PARK
PA-2	BOOTH FARMS PARK
PA-3	COMMUNITY PARK
PA-4	FIRESTONE CENTRAL PARK
PA-5	FIRESTONE REGIONAL PARK
PA-6	FIRESTONE SPORTS COMPLEX
PA-7	HARNEY PARK
PA-8	HART PARK
PA-9	HART PARK EXPANSION
PA-10	MOUNTAIN SHADOWS PARK
PA-11	NEIGHBORS POINT PARK
PA-12	PATTERSON PARK
PA-13	PRAIRIE RIDGE PARK
PA-14	SADDLEBACK HEIGHTS PARK
PA-15	SADDLEBACK PARK
PA-16	SAGEBRUSH PARK
PA-17	STONERIDGE PARK
PA-18	SABLE GLEN PARK

N

0 1500 3000
scale 1" = 3000' feet

FIRESTONE
A COMMUNITY IN MOTION

DATE	REVISION DESCRIPTION

CCG COLORADO CIVIL GROUP, INC. ENGINEERING CONSULTANTS
1413 W. 29TH STREET
LOVELAND, COLORADO 80538
(970) 278-0029

TOWN OF FIRESTONE
RAW WATER IRRIGATION SYSTEM MASTER PLAN
FIGURE 5.2.1
PRIORITY 1 PARKS DISTRIBUTION SYSTEM

FILENAME: RWIMP FIGURES
DESIGNED: C.E.M.
CHECKED: D.S.L.
JOB NO.: 0668.0149.00
SCALE: 1" = 3000'
DATE: DECEMBER 2009

SHEET NO.: 1 OF 1

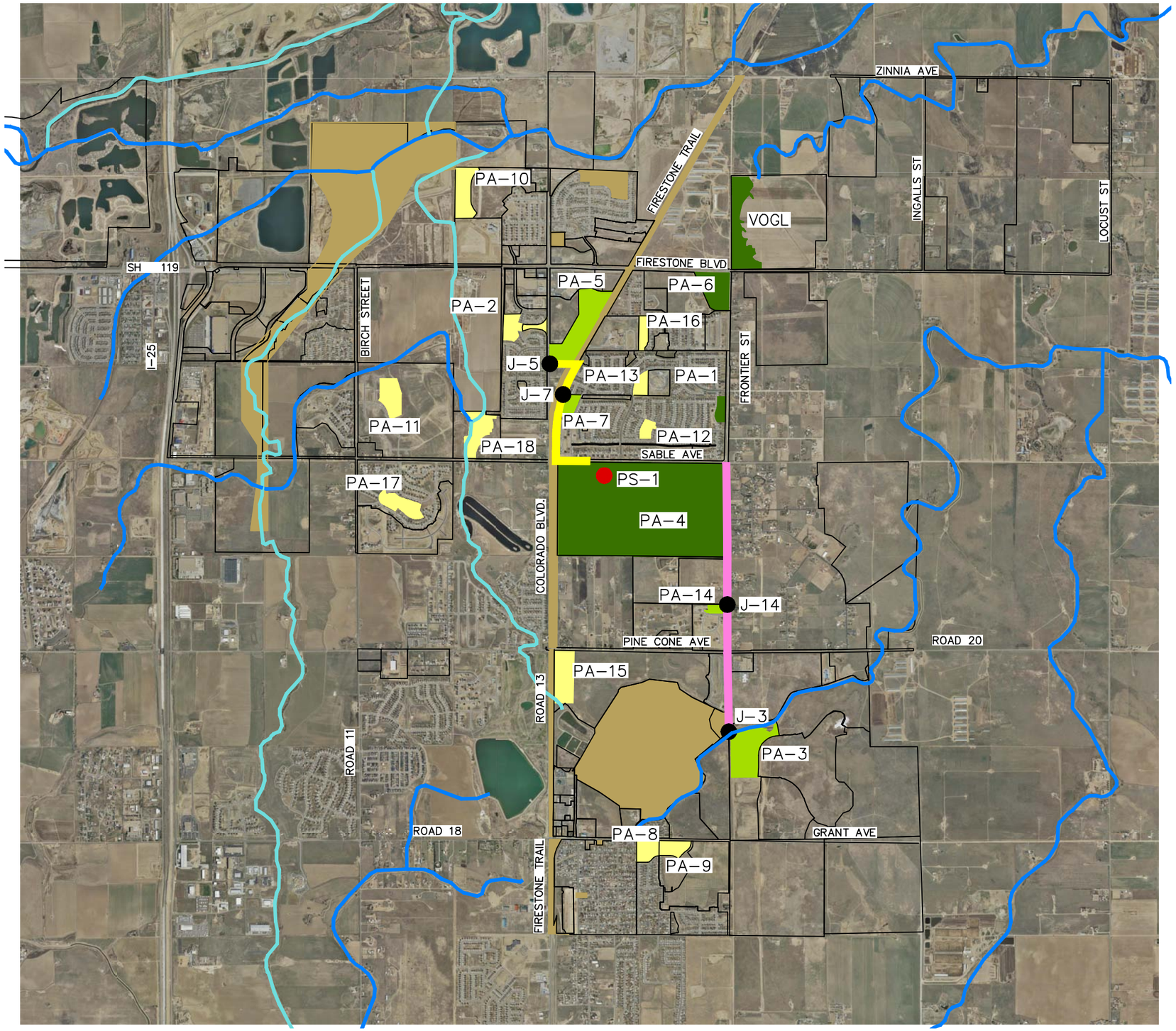

LEGEND

- PRIORITY 1
- PRIORITY 2
- PRIORITY 3
- AREA NOT INCLUDED
- EXISTING DRAINAGE WAY
- EXISTING DITCH
- J–4 DEMAND JUNCTION
- R–1 STORAGE RESERVOIR
- TP–1/PS–1 PUMP STATION
- 12–INCH FORCE MAIN
- 6–INCH DISTRIBUTION LINE
- 8–INCH DISTRIBUTION LINE
- 12–INCH DISTRIBUTION LINE
- 18–INCH DISTRIBUTION LINE

PARK INFORMATION

PARK I.D.	PARK NAME
PA-1	AISIK'S MEADOW PARK
PA-2	BOOTH FARMS PARK
PA-3	COMMUNITY PARK
PA-4	FIRESTONE CENTRAL PARK
PA-5	FIRESTONE REGIONAL PARK
PA-6	FIRESTONE SPORTS COMPLEX
PA-7	HARNEY PARK
PA-8	HART PARK
PA-9	HART PARK EXPANSION
PA-10	MOUNTAIN SHADOWS PARK
PA-11	NEIGHBORS POINT PARK
PA-12	PATTERSON PARK
PA-13	PRAIRIE RIDGE PARK
PA-14	SADDLEBACK HEIGHTS PARK
PA-15	SADDLEBACK PARK
PA-16	SAGEBRUSH PARK
PA-17	STONERIDGE PARK
PA-18	SABLE GLEN PARK

N

0 1500 3000
scale 1" = 3000' feet

FIRESTONE
A COMMUNITY IN MOTION

REVISIONS	
DATE	REVISION DESCRIPTION

CCG COLORADO CIVIL GROUP, INC. ENGINEERING CONSULTANTS
1413 W. 29TH STREET
LOVELAND, COLORADO 80538
(970) 278-0029

TOWN OF FIRESTONE
RAW WATER IRRIGATION SYSTEM MASTER PLAN
FIGURE 5.2.2
PRIORITY 2 PARKS DISTRIBUTION SYSTEM

FILENAME: RWIMP FIGURES
DESIGNED: C.E.M.
CHECKED: D.S.L.
JOB NO.: 0668.0149.00
SCALE: 1" = 3000'
DATE: DECEMBER 2009

SHEET NO.: 1 OF 1

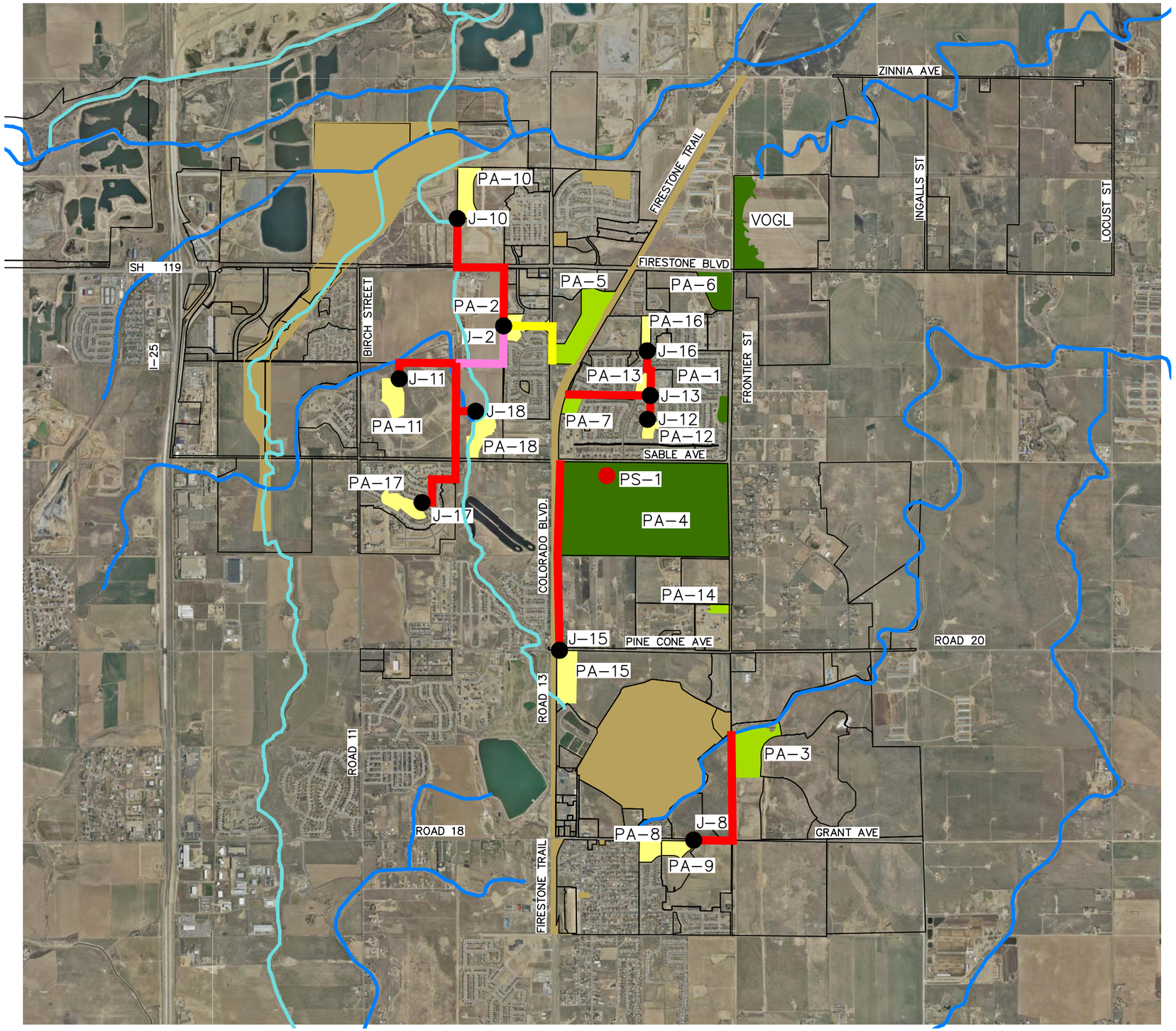

LEGEND

- PRIORITY 1
- PRIORITY 2
- PRIORITY 3
- AREA NOT INCLUDED
- EXISTING DRAINAGE WAY
- EXISTING DITCH
- J–4 DEMAND JUNCTION
- R–1 STORAGE RESERVOIR
- TP–1/PS–1 PUMP STATION
- 12–INCH FORCE MAIN
- 6–INCH DISTRIBUTION LINE
- 8–INCH DISTRIBUTION LINE
- 12–INCH DISTRIBUTION LINE
- 18–INCH DISTRIBUTION LINE

PARK INFORMATION

PARK I.D.	PARK NAME
PA-1	AISIK'S MEADOW PARK
PA-2	BOOTH FARMS PARK
PA-3	COMMUNITY PARK
PA-4	FIRESTONE CENTRAL PARK
PA-5	FIRESTONE REGIONAL PARK
PA-6	FIRESTONE SPORTS COMPLEX
PA-7	HARNEY PARK
PA-8	HART PARK
PA-9	HART PARK EXPANSION
PA-10	MOUNTAIN SHADOWS PARK
PA-11	NEIGHBORS POINT PARK
PA-12	PATTERSON PARK
PA-13	PRAIRIE RIDGE PARK
PA-14	SADDLEBACK HEIGHTS PARK
PA-15	SADDLEBACK PARK
PA-16	SAGEBRUSH PARK
PA-17	STONERIDGE PARK
PA-18	SABLE GLEN PARK

N

0 1500 3000
scale 1" = 3000' feet

FIRESTONE
A COMMUNITY IN MOTION

REVISIONS	
DATE	REVISION DESCRIPTION

CCG COLORADO CIVIL GROUP, INC. ENGINEERING CONSULTANTS
1413 W. 29TH STREET
LOVELAND, COLORADO 80538
(970) 278-0029

TOWN OF FIRESTONE
RAW WATER IRRIGATION SYSTEM MASTER PLAN
FIGURE 5.2.3
PRIORITY 3 PARKS DISTRIBUTION SYSTEM

FILENAME: RWIMP FIGURES
DESIGNED: C.E.M.
CHECKED: D.S.L.
JOB NO.: 0668.0149.00
SCALE: 1" = 3000'
DATE: DECEMBER 2009

SHEET NO.: 1 OF 1

5.2.1 Average Year Scenario

The Average Year Scenario assumed an application schedule of irrigating six days per week, eight hours per day. During the month of July, this is equivalent to an application rate of 13.6 gal/(min-acre). The supporting calculations for this application rate can be found in Appendix G. Using this application rate for all Priority 1-3 parks yields a DP station required capacity of 3,285 gpm as indicated in Table G1(Appendix G). Figure G1 and Table G2 (Appendix G); identify how these demands are distributed to serve all of the Priority 1-3 parks. Figure G1 shows additional nodes/junctions that were incorporated in the WaterCAD model but did not have irrigation demands applied to them.

The WaterCAD modeling results for the Average Year Scenario are listed in Tables G3 and G4 (Appendix G). The lowest dynamic system pressure is 81.9 psi at Junction J-8 (Hart Park & Hart Park Expansion) and the highest dynamic system pressure is 149.6 psi at Junction J-10 (Mountain Shadows Park). The highest pipe velocity is 4.14 feet per second in pipes P-36 and P-37 which is the 18-inch distribution line between the DP station and Sable Avenue. These results meet the system criteria listed in Section 5.5.

5.2.2 Drought Year Scenario

The Drought Year Scenario assumed an application schedule of irrigating seven days per week, eight hours per day. During the month of July, this is equivalent to an application rate of 14.6 gal/(min-acre), which is the highest of the three scenarios. The supporting calculations for this application rate can be found in Appendix G. Using this application rate for all Priority 1-3 parks yields a DP station required capacity of 3,527 gpm as indicated in Table G1(Appendix G). Figure G1 and Table G2(Appendix G) identify how these demands are distributed to serve all of the Priority 1-3 parks. Figure G1 shows additional nodes/junctions that were incorporated in the WaterCAD model but did not have irrigation demands applied to them.

The WaterCAD modeling results for the Drought Year Scenario are listed in Tables G5 and G6 (Appendix G). The lowest dynamic system pressure is 70.7 psi at Junction J-8 (Hart Park & Hart Park Expansion) and the highest dynamic system pressure is 146.1 psi at Junction J-10 (Mountain Shadows Park). The highest pipe velocity is 4.45 feet per second in pipes P-36 and P-37 which is the 18-inch distribution line between the DP station and Sable Avenue. These results meet the system criteria listed in Section 5.5.

5.3 Pump Station Configuration and Sizing

Evaluating both scenarios will ensure that the pump station and distribution system can accommodate either scenario while operating efficiently. For irrigation months other than July, either the days and/or hours per day can be reduced since the volume of irrigation water to be applied will be lower. As previously mentioned, the pump station will be designed to accommodate the drought-year scenario for the priority 1-3 parks. The pump station will generally be sized to pump at 3,600 gpm at 300 feet TDH, which is equivalent to a discharge pressure of 124.6 psi. The pump station has been initially configured with two pumps in parallel, each providing 1,800 gpm and 300 feet TDH. These parameters can be met by two Aurora Pump/Layne Vertiline vertical turbine pumps, each with a 200 hp motor. This is based on the

pump data provided Lee Mathews Equipment, Inc. in Appendix G. At the specified operating point, this pump has an efficiency of 83.2%.

5.4 Intake Structure Evaluation

The intake structure will designed and installed approximately one to two feet above the bottom of the Central Park storage reservoir. This configuration will keep debris on the surface and the bottom of the reservoir from being pulled into the pump station wet well. This will also allow the top three feet of reservoir storage to be utilized for irrigation without exposing the intake structure during normal drawdown. The additional depth of the intake structure will allow the distribution system to use additional volume in the reservoir when necessary (i.e. emergency situation, etc.). The intake structure will consist of a self cleaning screen and an intake pipe (approximately 18-inches in diameter) that connects to the pump station wet well. The intake structure will be designed with a slight slope towards the storage reservoir. If the reservoir is ever drained, the pump station intake structure and wet well will also drain. The intake pipe will also be installed with an isolation valve so the wet well can be pumped out when the pump station is winterized or needs to be serviced.

5.5 Distribution System Design Criteria

Adopted regulations and criteria are preferred to ensure consistency and compatibility between the multiple components of the raw water irrigation system. The distribution system shall meet the following criteria at a minimum:

1. Raw water irrigation lines shall be at least 4 inches in diameter. The minimum depth of cover shall be 4 feet and the maximum shall be 6 feet, whenever possible.

2. The raw water irrigation system shall be designed with a minimum dynamic pressure of 70 psi and a maximum dynamic pressure of 150 psi. Pressures greater than 150 psi shall be reduced with a pressure reducing valve (PRV). The maximum velocity within raw water irrigation lines shall be 5 feet per second.

3. The raw water irrigation lines shall be AWWA C900 or C905 polyvinyl chloride (PVC) pressure pipe, pressure class 165, purple color. PVC pipe markings shall include the designation “CAUTION NON-POTABLE WATER” or “CAUTION RECLAIMED WATER” in addition to the standard factory labeling required by AWWA. PVC may be substituted with high density polyethylene (HDPE) pipe pending approval from the Town of Firestone.

4. Underground marking tape shall be installed above raw water irrigation lines when purple color pipe or appurtenances are not used for construction.

5. Accessible appurtenances (i.e. hatches, manhole covers, meter pit lids, valve boxes, etc.), shall be stamped “IRRIGATION.”

6. Accessible appurtenances not available from the manufacturer in the purple color (i.e. hatches, manhole covers, meter pit lids, valve boxes, etc.), shall be primed and painted with 2 coats of an approved purple rust inhibitive paint.

The DP station shall meet or exceed the criteria listed in Section 4.3 and shall meet this additional requirement:

1. The pump system shall include a pressure maintenance (jockey) pump for sustaining the design pressure in the distribution system at all times. The requirement will be determined during the pump station design and may be satisfied by one of the primary pumps with a VFD.

5.6 Distribution System Opinions of Cost

Opinion of Costs were prepared for the Priority 1, 2, and 3 distribution systems and are listed in Tables 5.6.1, 5.6.2 and Table 5.6.3, respectively. Table 5.6.1 has an estimated cost of $3,119,350 for the Priority 1 distribution system, which is significantly higher because of the mandatory improvements that are needed initially. These improvements include the DP station, construction of the Central Park irrigation reservoir, and larger distribution pipe lines.

Table 5.6.1 Opinion of Cost (Priority 1 Distribution System)

Item No.	Description	Unit	Estimated Quantity	Unit Price	Cost
1.	**DISTRIBUTION PIPE SYSTEM**				
a	18-INCH PIPE (C905-DR25)	L.F.	695	$60.00	$41,700.00
b	16-INCH PIPE (C905-DR25)	L.F.	0	$55.00	$0.00
c	12-INCH PIPE (C900-DR25)	L.F.	3,805	$45.00	$171,225.00
d	8-INCH PIPE (C900-DR25)	L.F.	0	$35.00	$0.00
e	6-INCH PIPE (C900-DR25)	L.F.	4,240	$30.00	$127,200.00
f	IRRIGATION METER & SERVICE	EA.	2	$2,500.00	$5,000.00
				DISTRIBUTION PIPE SYSTEM SUBTOTAL	**$345,125.00**
2.	**DISTRIBUTION PUMP STATION**				
a	INTAKE STRUCTURE	EA.	1	$15,000.00	$15,000.00
b	PUMP STATION (3,600 GPM)	L.S.	1	$200,000.00	$200,000.00
c	SCADA & COMMUNICATION PACKAGE	L.S.	1	$30,000.00	$30,000.00
d	UNITED POWER ELECTRICAL SERVICE	L.S.	1	$75,000.00	$75,000.00
				PUMP STATION SUBTOTAL	**$320,000.00**
3.	**CENTRAL PARK STORAGE RESERVOIR**				
a	EARTHWORK - EXCAVATION	C.Y.	225,000	$3.50	$787,500.00
b	RESERVOIR LINER	S.Y.	89,000	$5.00	$445,000.00
c	RESERVOIR BANK STABILZATION-RIPRAP	S.Y.	3,525	$30.00	$105,750.00
d	OZONE BUBBLER SYSTEM	L.S.	1	$110,000.00	$110,000.00
				CENTRAL PARK STORAGE RESERVOIR	**$1,448,250.00**

CONSTRUCTION SUBTOTAL	**$2,113,375.00**
CONSTRUCTION CONTINGENCY (20%)	**$422,675.00**
CONSTRUCTION TOTAL	**$2,536,050.00**
ENGINEERING & DESIGN (8%)	**$202,884.00**
CONSTRUCTION ADMINSTRATION & TESTING (15%)	**$380,407.50**
PROJECT TOTAL	**$3,119,341.50**

Table 5.6.2 has an estimated cost of $707,375 for the Priority 2 distribution system. The Priority 2 distribution system opinion of cost consists of 12-inch and 8-inch pipe, four irrigation services and connecting to the existing Hart Park irrigation system.

Table 5.6.2 Opinion of Cost (Priority 2 Distribution System)

Item No.	Description	Unit	Estimated Quantity	Unit Price	Cost
1.	DISTRIBUTION PIPE SYSTEM				
a	18-INCH PIPE (C905-DR25)	L.F.	0	$60.00	$0.00
b	16-INCH PIPE (C905-DR25)	L.F.	0	$55.00	$0.00
c	12-INCH PIPE (C900-DR25)	L.F.	4,535	$45.00	$204,075.00
d	8-INCH PIPE (C900-DR25)	L.F.	7,505	$35.00	$262,675.00
e	6-INCH PIPE (C900-DR25)	L.F.	0	$30.00	$0.00
f	IRRIGATION METER & SERVICE	EA.	4	$2,500.00	$10,000.00
g	IRRIGATION SYSTEM RETROFIT	EA.	1	$2,500.00	$2,500.00
				DISTRIBUTION PIPE SYSTEM SUBTOTAL	$479,250.00

CONSTRUCTION SUBTOTAL	$479,250.00
CONSTRUCTION CONTINGENCY (20%)	$95,850.00
CONSTRUCTION TOTAL	$575,100.00
ENGINEERING & DESIGN (8%)	$46,008.00
CONSTRUCTION ADMINSTRATION & TESTING (15%)	$86,265.00
PROJECT TOTAL	$707,373.00

Table 5.6.3 has an estimated cost of $1,473,345 for the Priority 3 distribution system. The Priority 3 distribution system opinion of cost consists of 12-inch, 8-inch, and 6-inch pipe, 10 irrigation services and connecting to the irrigation systems at seven existing parks.

Table 5.6.3 Opinion of Cost (Priority 3 Distribution System)

Item No.	Description	Unit	Estimated Quantity	Unit Price	Cost
1.	DISTRIBUTION PIPE SYSTEM				
a	18-INCH PIPE (C905-DR25)	L.F.	0	$60.00	$0.00
b	16-INCH PIPE (C905-DR25)	L.F.	0	$55.00	$0.00
c	12-INCH PIPE (C900-DR25)	L.F.	2,405	$45.00	$108,225.00
d	8-INCH PIPE (C900-DR25)	L.F.	2,365	$35.00	$82,775.00
e	6-INCH PIPE (C900-DR25)	L.F.	25,490	$30.00	$764,700.00
f	IRRIGATION METER & SERVICE	EA.	10	$2,500.00	$25,000.00
g	IRRIGATION SYSTEM RETROFIT	EA.	7	$2,500.00	$17,500.00
				DISTRIBUTION PIPE SYSTEM SUBTOTAL	$998,200.00

CONSTRUCTION SUBTOTAL	$998,200.00
CONSTRUCTION CONTINGENCY (20%)	$199,640.00
CONSTRUCTION TOTAL	$1,197,840.00
ENGINEERING & DESIGN (8%)	$95,827.20
CONSTRUCTION ADMINSTRATION & TESTING (15%)	$179,676.00
PROJECT TOTAL	$1,473,343.20

5.7 Alternative Irrigation Supply

In the event of a drought condition similar to or exceeding that of 2002, the Town would still have the ability to irrigate using potable water. Potable water could also be used as an interim supply if the TP station is taken out of service for an extended period of time. Fire hydrants located at Central Park could be used to fill the storage reservoirs as needed to supply water to the system. A fire hydrant was installed with the Phase 1A infrastructure for Central Park and is located on the east side of Park Avenue, across from the Carbon Valley library site (Lot 1). There will be additional fire hydrants located along Park Avenue that will be installed with future phases of the park development that could also be used to fill the reservoirs.

6 Overall Project Opinion of Cost

Table 6.1 compiles the opinion of cost components that were identified in the previous sections of this Master Plan. This opinion of cost is for the Priority 1 Parks, Drought Year Scenario. Included within this Table is the acquisition of Coal Ridge Ditch water rights, installation of the TP station, and the construction of the Priority 1 distribution system.

Table 6.1 Opinion of Cost (Priority 1 Parks – Drought Year Scenario)

Item No.	Description	Unit	Estimated Quantity	Unit Price	Cost
1.	**PRIORITY 1 PARKS - DROUGHT YEAR SCENARIO**				
a	RAW WATER ACQUISTION	L.S.	1	$4,491,000.00	$4,491,000.00
b	TRANSFER PUMP (PUBLIC WORKS FACILITY)	L.S.	1	$1,142,608.50	$1,142,608.50
c	PRIORITY 1 DISTRIBUTION SYSTEM	L.S.	1	$3,119,341.50	$3,119,341.50
				PRIORITY 1 PARKS - DROUGHT YEAR SCENARIO TOTAL	**$8,752,950.00**

6.1 Annual Operation & Maintenance Expenses

In addition to the capital costs required for the raw water irrigation system, the Town of Firestone will incur annual operational and maintenance expenses. These costs will include power consumption for the two pump stations, maintenance of the pump stations and distribution system, and replacement of the system components as necessary. The maintenance schedule is based on a 20 week irrigation season, assuming 8 hours per week are necessary. An additional 16 hours have been added to the first and last weeks to handle the start up and winterization of the system. Table 6.2 itemizes these expenses and has an annual operation and maintenance budget of $115,650, approximately.

Table 6.2 Opinion of Cost (Annual Operation & Maintenance)

Item No.	Description	Unit	Estimated Quantity	Unit Price	Cost
1	**OPERATION & MAINTENANCE**				
a	MAINTENANCE PERSONNEL	HR.	192	$50.00	$9,600.00
b	TRANSFER PUMP SYSTEM POWER COST	KWH	12,308	$1.00	$12,308.00
c	DISTRIBUTION PUMP SYSTEM POWER COST	KWH	59,458	$1.00	$59,458.00
d	MISCELLANEOUS EQUIPMENT	L.S.	1	$15,000.00	$15,000.00
				ANNUAL O&M SUBTOTAL	**$96,366.00**

PROJECT SUBTOTAL	**$96,366.00**
ANNUAL O&M CONTINGENCY (20%)	**$19,273.20**
ANNUAL O&M BUDGET TOTAL	**$115,639.20**

7 References

2003 Water Master Plan
TST Inc., Consulting Engineers
June 2003

Northern Colorado Water Conservancy District, www.ncwcd.org

Town of Firestone Central Park Infrastructure Master Plan (Draft)
TST Inc., Consulting Engineers
2006

Town of Firestone Master Plan, 2008
Town of Firestone Raw Water Master Plan (August 2007)
Clear Water Solutions, Inc.
August 2007

Vogl Land – North Parcel Irrigation Report
Prominence Development Corp.
November 7, 2005

Appendix A: Park Information

TABLE A1
PARK SUMMARY
PRIORITY 1-3 RANKING

PARK I.D.	PARK NAME	IRRIGATION PRIORITY	MAINTENANCE RESPONSIBILITY	SUBDIVISION	LEGAL DESCRIPTION	STATUS	PARK TOTAL AREA[2] (acres)	IRRIGATED AREA[1 3] (acres)
PA-1	AISIK'S MEADOW PARK	1	HOA	RIDGECREST	**FP St. Vrain Ranch Subdivision Filing III, Tract C**	RETROFIT	**3.9**	**2.9**
PA-2	BOOTH FARMS PARK	3	HOA	BOOTH FARMS	**FP Booth Farms First Filing, Outlot A**	PROPOSED	**7.2**	**5.4**
		3	HOA	BOOTH FARMS	**FP Booth Farms Second Filing, Outlot C**	PROPOSED	**2.8**	**2.1**
PA-3	COMMUNITY PARK	2	HOA	SADDLEBACK HILLS	**PP Saddleback Hills Subdivision, Tract K**	RETROFIT	**27.3**	**20.5**
PA-4	FIRESTONE CENTRAL PARK	1	PUBLIC	FIRESTONE CENTRAL PARK	**FP Firestone Central Park First Filing Minor Subdivision, Outlot 1**	PROPOSED	**66.9**	**23.0**
		1	PUBLIC	FIRESTONE CENTRAL PARK	**FP Firestone Central Park First Filing Minor Subdivision, Outlot 2**	PROPOSED	**194.8**	**67.0**
PA-5	FIRESTONE REGIONAL PARK	2	PUBLIC	BOOTH FARMS	**Minor Subdivision Plat Booth Farm, Lot 2**	PROPOSED	**32.6**	**24.5**
PA-6	FIRESTONE SPORTS COMPLEX	1	PUBLIC	N/A	**Firestone Sports Field Site Minor Plat**	RETROFIT	**18.5**	**13.9**
PA-7	HARNEY PARK	2	HOA	ST. VRAIN RANCH	**FP St. Vrain Ranch Subdivision Filing I, Outlot A**	RETROFIT	**5.4**	**4.1**
PA-8	HART PARK	3	PUBLIC	N/A	**N/A**	RETROFIT	**7.8**	**5.9**
PA-9	HART PARK EXPANSION	3	PUBLIC	THE OVERLOOK AT FIRESTONE	**FP The Overlook at Firestone Filing No. 3, Tract J (NR)**	PROPOSED	**7.4**	**5.6**
PA-10	MOUNTAIN SHADOWS PARK	3	HOA	MOUNTAIN SHADOWS	**FP Mountain Shadows Subdivision Filing No. 1, Tract A**	RETROFIT	**17.0**	**12.8**
PA-11	NEIGHBORS POINT PARK	3	HOA	NEIGHBORS POINT	**FP Neighbors Point Filing No. 1, Tract C**	RETROFIT	**22.3**	**16.7**
PA-12	PATTERSON PARK	3	HOA	ST. VRAIN RANCH	**FP St. Vrain Ranch Subdivision Filing II, Tract B**	RETROFIT	**3.4**	**2.6**
PA-13	PRAIRIE RIDGE PARK	3	HOA	RIDGECREST	**FP Ridge Crest P.U.D. Filing No. 1, Tract F**	RETROFIT	**5.1**	**3.8**
PA-14	SADDLEBACK HEIGHTS PARK	2	HOA	SADDLEBACK HEIGHTS	**FP Saddleback Heights, Outlot B**	PROPOSED	**2.7**	**2.0**
PA-15	SADDLEBACK PARK	3	HOA	SADDLEBACK PUD	**PP Saddleback, Outlot K**	PROPOSED	**5.7**	**4.3**
PA-16	SAGEBRUSH PARK	3	HOA	SAGEBRUSH	**Sagebrush, Tract H**	RETROFIT	**5.7**	**4.3**
PA-17	STONERIDGE PARK	3	HOA	STONERIDGE	**Stoneridge Subdivision Filing No. 1, Tract I**	RETROFIT	**11.9**	**8.9**
PA-18	SABLE GLEN PARK	3	HOA	SABLE GLEN	**FP Sable Glen, Tract C (Not Recorded)**	PROPOSED	**15.3**	**11.5**
						TOTAL	**463.7**	**241.5**

Notes:

[1]The irrigated area for Firestone Central Park is 90 acres (34.4% of the total area)

[2]Hart Park area was taken from The Town of Firestone Land Use Map

[3]Irrigated percentage for most parks = 75.0%

SETTLER'S PARK
TOTAL AREA = 5,681,316 ft²
IRRIGATED AREA = 4,929,403 ft²
% IRRIGATED = 86.8%

AISIK'S MEADOW PARK
TOTAL AREA = 1,703,495 ft²
IRRIGATED AREA = 379,142 ft²
% IRRIGATED = 22.3%

AERIAL PHOTOS FOR SETTLER'S PARK & HARNEY PARK DO NOT SHOW COMPLETED IRRIGATED AREA. FIELD INSPECTION WAS USED TO DETERMINE TOTAL IRRIGATED AREA OF THESE PARKS.

HARNEY PARK
TOTAL AREA = 2,819,479 ft²
IRRIGATED AREA = 1,827,423 ft²
% IRRIGATED = 64.8%

HART PARK
TOTAL AREA = 3,381,563 ft²
IRRIGATED AREA = 2,382,065 ft²
% IRRIGATED = 70.4%

HARNEY/SETTLER'S/AISIK'S MEADOW/HART PARKS
TOTAL AREA = 14,204,153 ft²
IRRIGATED AREA = 9,518,033 ft²
% IRRIGATED (AVG.) = 67.0%

FILENAME: PARK AREA FIGURE
DESIGNED: C.E.M.
CHECKED: D.B.L.
JOB NO.: 0606.01.49.00
SCALE: N.T.S.
DATE: DECEMBER 2009
SHEET NO.: 1 OF 1

TOWN OF FIRESTONE
RAW WATER IRRIGATION SYSTEM MASTER PLAN

FIGURE A1 - EXISTING PARK IRRIGATED AREA EVALUATION

CCG COLORADO CIVIL GROUP, INC. ENGINEERING CONSULTANTS

Appendix B: Precipitation and ET_O Data

TABLE B1
NCWCD WEATHER STATION DATA
LONGMONT SOUTH
PRECIPITATION SUMMARY

Year	Monthly Precipitation Total												Total
	January (inches)	February (inches)	March (inches)	April (inches)	May (inches)	June (inches)	July (inches)	August (inches)	September (inches)	October (inches)	November (inches)	December (inches)	(inches)
1998	0.10	0.22	1.48	2.48	0.75	0.77	0.82	0.97	0.24	1.08	0.71	0.65	**10.27**
1999	0.25	0.10	0.58	5.13	1.18	0.50	2.13	1.07	1.38	0.67	0.63	0.34	**13.96**
2000	0.27	0.20	1.07	0.68	1.81	0.69	1.16	0.69	1.61	0.49	0.58	0.28	**9.53**
2001	0.53	0.36	1.25	2.08	2.60	0.70	1.03	0.58	0.23	0.18	0.62	0.22	**10.38**
2002	0.64	0.42	0.58	0.21	2.18	0.94	0.04	0.63	0.97	1.04	0.51	0.02	**8.18**
2003	0.02	0.55	1.67	1.75	1.95	2.29	0.32	2.73	0.32	0.04	0.65	0.37	**12.66**
2004	0.64	0.45	0.33	3.03	1.12	2.54	2.23	2.19	2.29	0.96	1.13	0.18	**17.09**
2005	0.85	0.23	1.16	2.15	1.56	2.54	0.52	1.66	0.33	2.41	0.22	0.26	**13.89**
2006	0.26	0.30	1.00	0.42	0.63	0.27	2.25	0.68	0.66	2.43	0.50	1.07	**10.47**
2007	0.26	0.25	1.14	1.30	0.77	0.47	0.60	1.33	2.06	1.31	0.15	0.35	**9.99**
Average	**0.38**	**0.31**	**1.03**	**1.92**	**1.46**	**1.17**	**1.11**	**1.25**	**1.01**	**1.06**	**0.57**	**0.37**	**11.64**

TABLE B2
NCWCD WEATHER STATION DATA
LONGMONT SOUTH
ET_o SUMMARY

Year	Monthly ET_o Total												Total
	January (inches)	February (inches)	March (inches)	April (inches)	May (inches)	June (inches)	July (inches)	August (inches)	September (inches)	October (inches)	November (inches)	December (inches)	(inches)
1998	n/a	n/a	2.79	3.88	5.89	6.09	6.13	5.72	4.88	2.52	n/a	n/a	**37.90**
1999	n/a	n/a	3.80	3.30	4.96	5.95	6.50	5.27	4.01	3.03	n/a	n/a	**36.82**
2000	n/a	n/a	3.00	4.84	6.14	6.93	7.32	5.81	4.58	2.38	n/a	n/a	**41.00**
2001	n/a	n/a	2.57	4.04	4.91	6.94	7.09	5.75	4.33	3.24	n/a	n/a	**38.87**
2002	n/a	n/a	2.97	5.14	5.18	7.01	7.94	6.41	4.65	2.54	n/a	n/a	**41.84**
2003	n/a	n/a	3.55	4.36	5.03	5.42	7.16	6.07	4.02	3.45	n/a	n/a	**39.06**
2004	n/a	n/a	4.03	3.77	5.68	5.04	6.08	5.22	4.32	2.78	n/a	n/a	**36.92**
2005	n/a	n/a	3.21	4.10	5.36	6.24	7.64	5.91	4.69	2.65	n/a	n/a	**39.80**
2006	n/a	n/a	3.19	5.53	5.96	7.49	6.87	5.58	3.99	2.87	n/a	n/a	**41.48**
2007	n/a	n/a	3.56	4.00	5.00	6.54	7.08	6.18	4.81	3.41	n/a	n/a	**40.58**
Average	n/a	n/a	**3.27**	**4.30**	**5.41**	**6.37**	**6.98**	**5.79**	**4.43**	**2.89**	n/a	n/a	**39.43**

TABLE B3
NCWCD WEATHER STATION DATA
LONGMONT SOUTH
2007

Date		Temperature			Relative Humidity	Dew Point	Precipitation Total	Wind			Solar Radiation	ASCE Calculation		Calculation Pan
Month	Day	Max. (°F)	Min. (°F)	Average (°F)	Average (%)	Average (°F)	(inch)	Max (mph)	Total (miles)	Average (mph)	Total (Langl)	ET_r Alfalfa (inch)	ET_o Grass (inch)	(Kp)
1	1	38.3	10.2	22.4	66.0	12.3	0.06	8.1	68.4	2.9	243.7			
1	2	41.0	5.1	20.8	67.3	11.3	0.01	8.2	63.5	2.6	247.4			
1	3	58.1	21.3	41.4	46.9	20.2		34.6	165.8	6.9	122.0			
1	4	56.1	31.7	44.0	53.0	26.3		33.0	221.9	9.2	206.3			
1	5	32.1	3.4	22.9	93.7	22.3		19.1	139.1	5.8	130.9			
1	6	38.6	-2.0	18.5	66.0	9.2	0.01	42.9	246.7	10.3	220.6			
1	7	40.8	12.6	25.9	44.3	7.6		46.3	235.2	9.8	257.4			
1	8	52.8	25.9	41.8	42.2	19.6	0.02	53.3	379.1	15.8	233.1			
1	9	37.0	19.1	26.3	78.8	20.6		16.6	47.5	2.0	232.3			
1	10	57.5	17.5	37.6	45.7	15.7		38.4	132.2	5.5	246.4			
1	11	30.9	6.4	21.2	77.3	15.2		11.5	56.0	2.3	119.3			
1	12	6.9	-0.9	1.3	80.4	-3.1		12.9	8.5	0.4	219.0			
1	13	7.2	-2.6	1.8	74.6	-4.3		11.1	27.9	1.2	257.8			
1	14	19.3	-5.8	7.9	84.6	4.6	0.03	8.6	31.0	1.3	130.0			
1	15	25.1	-5.8	6.2	75.6	0.6	0.05	10.3	47.7	2.0	238.9			
1	16	32.7	-1.1	11.7	68.6	3.2		7.4	45.0	1.9	276.9			
1	17	40.4	0.1	22.6	51.1	5.1		33.5	180.3	7.5	277.4			
1	18	32.8	2.4	19.5	48.2	2.6		37.7	170.7	7.1	280.1			
1	19	30.9	2.1	13.7	62.1	2.8		11.3	67.9	2.8	278.9			
1	20	26.4	5.6	17.4	71.8	10.3		9.1	55.9	2.3	154.0			
1	21	27.7	16.4	24.0	87.4	21.1	0.01	17.8	104.2	4.3	156.2			
1	22	32.6	-0.1	14.6	78.3	9.2	0.04	9.5	61.0	2.5	288.0			
1	23	42.8	7.6	26.0	67.9	16.7		14.9	112.1	4.7	284.3			
1	24	50.6	13.7	28.4	69.7	19.4		9.6	71.5	3.0	287.1			
1	25	58.4	15.8	31.3	63.0	19.0		7.1	55.5	2.3	294.0			
1	26	51.5	18.7	30.9	60.5	18.4		12.9	80.9	3.4	294.8			
1	27	27.0	-1.3	17.1	83.5	13.7	0.01	15.1	86.7	3.6	219.3			
1	28	41.4	-2.9	17.0	66.6	7.2	0.01	25.3	96.6	4.0	314.3			
1	29	29.8	7.0	19.5	59.5	7.7		15.4	83.9	3.5	307.3			

TABLE B3
NCWCD WEATHER STATION DATA
LONGMONT SOUTH
2007

Date		Temperature			Relative Humidity	Dew Point	Precipitation Total	Wind			Solar Radiation	ASCE Calculation		Calculation Pan
Month	Day	Max. (°F)	Min. (°F)	Average (°F)	Average (%)	Average (°F)	(inch)	Max (mph)	Total (miles)	Average (mph)	Total (Langl)	ET_r Alfalfa (inch)	ET_o Grass (inch)	(Kp)
1	30	24.1	5.9	16.4	66.1	6.9		10.7	72.5	3.0	269.8			
1	31	22.4	0.9	15.8	81.2	11.5	0.01	11.1	75.9	3.2	228.7			
2	1	21.1	-4.7	7.6	83.0	4.4		12.7	39.9	1.7	160.9			
2	2	27.5	-17.1	7.8	62.5	-1.4		32.6	168.2	7.0	352.8			
2	3	34.3	10.2	21.4	62.9	10.0	0.03	34.0	141.7	5.9	329.8			
2	4	29.6	10.7	18.0	83.2	13.8	0.01	9.0	44.7	1.9	260.8			
2	5	51.7	13.0	33.3	55.1	18.8		27.0	117.3	4.9	296.6			
2	6	55.7	31.5	44.5	54.9	28.8		38.5	203.3	8.5	281.4			
2	7	42.3	22.9	31.1	81.2	26.0		12.3	49.8	2.1	283.7			
2	8	50.1	21.7	30.9	78.9	23.7		27.6	116.6	4.9	217.4			
2	9	40.0	21.1	26.9	87.7	23.5		10.3	47.7	2.0	214.6			
2	10	37.1	22.1	27.6	89.5	25.0		12.6	62.3	2.6	305.4			
2	11	47.0	24.9	34.6	74.7	27.2		12.5	91.2	3.8	322.9			
2	12	41.6	19.8	32.8	83.6	28.6		18.6	79.4	3.3	290.0			
2	13	20.3	10.7	14.4	86.0	11.1		9.7	4.6	0.2	150.3			
2	14	20.3	3.0	13.4	87.5	10.7	0.06	7.4	17.7	0.7	232.4			
2	15	42.9	1.2	13.9	81.0	9.3	0.03	30.3	59.7	2.5	270.6			
2	16	49.0	30.9	38.5	58.9	24.6	0.01	57.5	463.9	19.3	336.1			
2	17	37.9	23.1	31.4	60.9	19.0		27.3	119.2	5.0	384.6			
2	18	52.5	22.6	37.0	55.2	21.6		12.9	90.2	3.8	372.8			
2	19	53.8	29.9	40.9	60.6	27.0		32.8	168.4	7.0	278.2			
2	20	52.5	24.5	37.9	64.0	25.2		31.0	162.0	6.8	358.3			
2	21	54.4	32.3	43.8	46.6	24.2		30.4	159.1	6.6	387.1			
2	22	42.4	25.3	34.4	78.1	28.2		10.5	84.1	3.5	394.3			
2	23	47.4	20.3	35.1	76.4	27.9		31.0	144.4	6.0	332.3			
2	24	47.1	24.7	37.1	44.2	16.7		35.7	282.1	11.8	358.7			
2	25	38.7	20.1	28.6	71.2	20.5		15.6	112.6	4.7	384.0			
2	26	49.5	23.9	38.2	44.5	16.5		47.9	275.9	11.5	404.0			
2	27	45.3	24.1	35.2	62.4	23.4		15.1	89.7	3.7	359.5			

TABLE B3
NCWCD WEATHER STATION DATA
LONGMONT SOUTH
2007

Date		Temperature			Relative Humidity	Dew Point	Precipitation Total	Wind			Solar Radiation	ASCE Calculation		Calculation Pan
Month	Day	Max. (°F)	Min. (°F)	Average (°F)	Average (%)	Average (°F)	(inch)	Max (mph)	Total (miles)	Average (mph)	Total (Langl)	ET_r Alfalfa (inch)	ET_o Grass (inch)	(Kp)
2	28	32.1	12.6	25.3	88.7	22.7	0.11	14.1	92.7	3.9	178.9			
3	1	35.1	14.3	26.3	42.9	6.5	0.01	38.4	295.4	12.3	409.8	0.11	0.08	0.72
3	2	33.6	19.6	25.3	45.9	6.7		31.2	185.9	7.7	316.1	0.10	0.07	0.72
3	3	41.1	14.7	29.0	38.9	5.5		13.4	100.7	4.2	442.6	0.10	0.07	0.76
3	4	54.1	19.1	36.4	51.4	19.3		22.0	119.4	5.0	435.5	0.13	0.09	0.80
3	5	52.3	28.2	38.8	65.8	27.5		7.6	51.6	2.1	213.4	0.07	0.05	0.83
3	6	63.2	31.3	46.0	49.4	25.6		15.7	91.6	3.8	355.4	0.14	0.10	0.82
3	7	64.3	30.7	47.5	44.6	24.3		15.6	107.9	4.5	442.1	0.17	0.12	0.80
3	8	63.7	31.3	45.8	48.2	25.7		36.0	163.3	6.8	308.7	0.19	0.13	0.78
3	9	66.6	27.2	45.5	47.0	23.6		27.3	147.6	6.2	353.7	0.20	0.14	0.77
3	10	56.2	38.4	45.1	60.8	31.6	0.05	17.4	87.6	3.6	169.0	0.10	0.07	0.80
3	11	62.0	28.8	46.4	59.4	30.3		15.1	90.6	3.8	450.7	0.14	0.10	0.82
3	12	73.4	32.7	53.2	41.9	26.9		17.4	89.0	3.7	464.2	0.19	0.14	0.81
3	13	77.4	36.5	57.1	34.4	26.0		26.2	168.5	7.0	427.8	0.29	0.19	0.77
3	14	61.3	40.0	51.7	50.3	33.1		29.1	150.2	6.3	389.2	0.17	0.12	0.76
3	15	52.9	26.6	37.4	70.5	28.3	0.01	30.0	105.1	4.4	172.4	0.09	0.06	0.81
3	16	69.5	24.0	48.8	49.0	25.3		18.3	111.6	4.7	430.9	0.19	0.14	0.82
3	17	76.1	40.0	58.4	28.3	23.1		20.8	155.3	6.5	429.9	0.28	0.19	0.76
3	18	79.1	37.0	59.0	28.1	23.5		31.9	196.4	8.2	363.3	0.33	0.22	0.71
3	19	68.4	35.5	53.3	44.8	31.2		22.3	136.3	5.7	453.8	0.20	0.14	0.75
3	20	74.8	34.8	54.8	43.6	28.7		17.6	103.1	4.3	434.1	0.21	0.15	0.79
3	21	70.8	41.0	56.1	36.3	28.1		32.1	154.1	6.4	300.8	0.23	0.16	0.77
3	22	65.3	35.7	50.1	56.9	34.1		14.1	90.9	3.8	372.5	0.14	0.11	0.78
3	23	68.5	39.1	51.8	59.4	36.9	0.41	27.3	166.5	6.9	329.7	0.20	0.14	0.81
3	24	47.2	39.9	42.8	86.0	38.9	0.45	22.6	187.1	7.8	74.6	0.05	0.04	0.80
3	25	70.1	41.7	54.3	55.3	36.4	0.01	17.2	125.9	5.2	527.7	0.21	0.16	0.80
3	26	64.0	39.2	53.2	56.8	37.9	0.03	24.3	105.9	4.4	392.0	0.14	0.11	0.81
3	27	63.1	41.9	51.9	73.8	43.4		26.9	123.1	5.1	308.2	0.12	0.09	0.83
3	28	62.2	35.6	49.6	56.0	31.9		34.7	243.2	10.1	485.2	0.22	0.15	0.79

TABLE B3
NCWCD WEATHER STATION DATA
LONGMONT SOUTH
2007

Date		Temperature			Relative Humidity	Dew Point	Precipitation Total	Wind			Solar Radiation	ASCE Calculation		Calculation Pan
Month	Day	Max. (°F)	Min. (°F)	Average (°F)	Average (%)	Average (°F)	(inch)	Max (mph)	Total (miles)	Average (mph)	Total (Langl)	ET_r Alfalfa (inch)	ET_o Grass (inch)	(Kp)
3	29	36.1	26.8	31.0	85.2	26.9	0.13	29.0	207.2	8.6	287.0	0.06	0.05	0.77
3	30	39.0	23.2	31.7	77.3	25.4	0.04	14.3	82.1	3.4	284.4	0.06	0.05	0.83
3	31	58.5	25.6	43.9	56.7	26.8		33.5	171.5	7.1	500.2	0.17	0.13	0.83
4	1	67.5	32.9	52.6	47.9	31.4		25.8	133.3	5.6	485.1	0.20	0.15	0.80
4	2	73.3	36.0	53.8	50.4	33.0		36.6	181.0	7.5	536.6	0.27	0.19	0.78
4	3	54.1	31.2	43.5	55.5	28.2		17.0	160.0	6.7	551.3	0.16	0.12	0.78
4	4	56.6	26.4	41.7	63.3	29.6		15.2	101.5	4.2	462.7	0.13	0.10	0.81
4	5	52.4	34.8	41.4	66.0	30.8		23.4	161.2	6.7	345.5	0.13	0.10	0.82
4	6	36.0	24.6	27.9	87.8	24.9	0.01	18.7	83.2	3.5	80.8	0.04	0.03	0.83
4	7	25.8	22.0	24.2	91.1	22.0		7.8	78.5	3.3	86.2	0.02	0.02	0.86
4	8	40.5	24.0	30.2	88.4	27.3	0.05	11.5	41.9	1.7	228.5	0.05	0.05	0.87
4	9	69.8	29.4	50.1	60.4	33.9		28.6	165.5	6.9	549.9	0.23	0.17	0.84
4	10	52.6	29.9	42.5	42.4	21.0	0.01	47.0	320.4	13.3	554.7	0.22	0.15	0.75
4	11	51.2	28.1	40.3	29.3	9.4		31.0	227.6	9.5	630.1	0.23	0.16	0.68
4	12	43.6	22.2	34.4	71.0	25.8		25.6	120.0	5.0	431.4	0.09	0.08	0.76
4	13	45.2	28.2	36.6	77.6	30.0		16.1	121.9	5.1	262.2	0.08	0.06	0.84
4	14	64.5	21.0	45.0	46.9	21.3		15.2	87.6	3.6	624.0	0.19	0.15	0.83
4	15	74.3	32.1	54.8	39.6	28.3		29.7	154.3	6.4	572.4	0.28	0.20	0.80
4	16	60.1	39.5	50.4	60.1	36.7	0.03	23.0	197.9	8.2	334.4	0.16	0.12	0.77
4	17	58.4	40.8	47.4	76.4	39.9	0.08	16.1	125.0	5.2	343.1	0.12	0.10	0.80
4	18	66.3	34.5	52.7	63.6	39.3		32.7	170.3	7.1	482.8	0.19	0.14	0.82
4	19	62.4	38.5	50.2	27.6	16.9		51.4	296.1	12.3	646.6	0.33	0.23	0.73
4	20	70.8	27.9	51.5	38.0	25.5		18.1	112.0	4.7	606.9	0.24	0.18	0.72
4	21	62.1	38.2	52.1	43.8	29.6		32.8	176.9	7.4	360.7	0.20	0.14	0.78
4	22	64.8	36.7	52.3	49.7	32.7		20.5	140.6	5.9	553.5	0.21	0.16	0.77
4	23	60.9	37.6	49.5	74.1	41.3	0.05	25.4	199.1	8.3	383.2	0.14	0.11	0.80
4	24	44.3	37.9	40.2	88.7	37.2	1.06	38.8	345.4	14.4	61.2	0.05	0.04	0.77
4	25	54.6	35.4	45.2	73.4	36.9	0.01	16.1	91.3	3.8	478.2	0.12	0.11	0.79
4	26	68.0	32.9	50.0	68.6	38.9		31.2	108.8	4.5	473.0	0.17	0.14	0.85

TABLE B3
NCWCD WEATHER STATION DATA
LONGMONT SOUTH
2007

Date		Temperature			Relative Humidity	Dew Point	Precipitation	Wind			Solar Radiation	ASCE Calculation		Calculation Pan
Month	Day	Max. (°F)	Min. (°F)	Average (°F)	Average (%)	Average (°F)	Total (inch)	Max (mph)	Total (miles)	Average (mph)	Total (Langl)	ET_r Alfalfa (inch)	ET_o Grass (inch)	(Kp)
4	27	65.1	39.4	53.1	64.4	40.5		16.9	112.4	4.7	633.4	0.19	0.16	0.84
4	28	75.8	40.3	59.8	53.2	40.5		15.0	104.3	4.3	650.3	0.24	0.19	0.82
4	29	82.1	44.1	65.5	42.6	39.7		26.7	138.7	5.8	654.2	0.31	0.23	0.80
4	30	82.2	48.1	64.0	47.3	41.9		28.4	141.3	5.9	511.7	0.29	0.22	0.78
5	1	67.0	45.8	56.5	70.5	46.8	0.09	29.3	101.6	4.2	373.9	0.14	0.12	0.81
5	2	70.7	42.0	57.7	65.5	45.2		29.3	202.8	8.4	573.4	0.23	0.18	0.82
5	3	73.7	45.4	57.5	59.5	42.5		41.4	184.8	7.7	566.8	0.27	0.20	0.78
5	4	57.4	41.2	47.2	66.6	36.1	0.07	21.7	177.4	7.4	282.7	0.15	0.11	0.78
5	5	57.7	36.5	46.4	78.7	39.7	0.21	22.4	134.3	5.6	369.9	0.12	0.10	0.81
5	6	58.3	34.5	45.5	69.5	35.2	0.08	21.1	151.2	6.3	440.9	0.15	0.12	0.82
5	7	57.7	37.7	48.2	64.1	35.9		19.6	118.0	4.9	426.8	0.14	0.12	0.82
5	8	68.3	34.1	53.5	54.7	35.2		15.6	80.9	3.4	625.7	0.20	0.17	0.83
5	9	74.7	38.2	56.9	56.0	39.4	0.01	34.6	83.5	3.5	605.7	0.22	0.18	0.83
5	10	77.8	44.7	63.0	48.3	40.8		15.2	88.9	3.7	644.4	0.25	0.20	0.82
5	11	83.6	43.8	65.8	44.1	40.2		14.8	98.4	4.1	666.4	0.28	0.23	0.81
5	12	81.3	48.9	65.6	43.9	41.7		29.7	107.0	4.5	512.7	0.26	0.20	0.80
5	13	86.5	46.0	66.7	44.7	42.2		20.9	135.4	5.6	463.1	0.30	0.22	0.79
5	14	72.7	48.0	59.0	62.5	45.6	0.03	31.1	143.9	6.0	508.0	0.22	0.17	0.79
5	15	60.1	44.7	53.0	71.7	43.7		12.9	70.4	2.9	322.6	0.11	0.10	0.83
5	16	73.8	43.1	58.8	59.0	42.6		15.1	84.6	3.5	625.4	0.22	0.18	0.84
5	17	70.1	43.7	56.9	66.3	45.2		22.6	88.1	3.7	426.4	0.16	0.14	0.84
5	18	80.7	39.2	61.6	50.9	40.9		28.1	120.4	5.0	516.3	0.26	0.20	0.83
5	19	79.4	42.8	62.9	50.6	42.5		38.9	98.8	4.1	533.4	0.24	0.19	0.82
5	20	79.0	44.8	62.4	55.2	44.5		31.0	100.4	4.2	482.8	0.22	0.18	0.82
5	21	79.4	45.5	60.8	60.2	45.5	0.04	26.8	104.3	4.3	440.3	0.22	0.17	0.82
5	22	62.7	41.1	49.3	79.0	42.9	0.04	24.3	123.6	5.2	205.3	0.12	0.09	0.83
5	23	57.6	40.0	47.0	73.3	38.4		18.1	121.5	5.1	244.3	0.12	0.09	0.83
5	24	64.8	35.6	52.7	59.1	37.3		20.2	130.3	5.4	573.4	0.19	0.16	0.82
5	25	76.2	36.3	59.5	49.9	37.9		19.1	110.6	4.6	637.5	0.25	0.20	0.82

TABLE B3
NCWCD WEATHER STATION DATA
LONGMONT SOUTH
2007

Date		Temperature			Relative Humidity	Dew Point	Precipitation Total	Wind			Solar Radiation	ASCE Calculation		Calculation Pan
Month	Day	Max. (°F)	Min. (°F)	Average (°F)	Average (%)	Average (°F)	(inch)	Max (mph)	Total (miles)	Average (mph)	Total (Langl)	ET_r Alfalfa (inch)	ET_o Grass (inch)	(Kp)
5	26	71.5	41.2	57.2	62.2	43.8	0.01	17.3	102.4	4.3	520.4	0.19	0.16	0.83
5	27	83.6	42.0	65.2	49.9	42.7		19.9	91.5	3.8	432.5	0.23	0.18	0.83
5	28	84.3	48.0	67.6	44.1	43.1		38.3	120.6	5.0	419.0	0.27	0.20	0.81
5	29	71.3	43.5	53.8	76.8	46.0	0.09	26.7	125.0	5.2	235.3	0.15	0.11	0.81
5	30	65.1	41.1	53.4	68.2	42.3	0.09	14.7	107.9	4.5	466.3	0.16	0.14	0.83
5	31	76.1	42.6	57.5	58.7	40.6	0.01	25.3	140.8	5.9	491.7	0.25	0.19	0.81
6	1	68.1	44.9	56.0	65.6	44.0		10.4	61.9	2.6	349.7	0.14	0.12	0.82
6	2	74.4	46.7	60.1	64.4	47.1	0.01	15.6	78.7	3.3	558.3	0.20	0.17	0.85
6	3	73.7	45.8	60.0	64.1	46.7	0.16	20.1	103.6	4.3	372.9	0.18	0.14	0.84
6	4	78.0	45.6	62.7	56.7	45.6	0.08	21.0	100.9	4.2	527.4	0.23	0.18	0.83
6	5	84.1	47.5	64.9	61.0	49.9		18.1	82.7	3.4	428.1	0.21	0.17	0.83
6	6	81.2	48.4	63.2	40.5	36.9		55.0	313.6	13.1	494.7	0.44	0.30	0.76
6	7	68.2	41.0	52.6	44.3	29.9		40.0	229.8	9.6	587.7	0.31	0.22	0.69
6	8	74.6	36.0	57.0	49.3	35.9		14.9	79.3	3.3	668.1	0.23	0.19	0.77
6	9	84.0	43.0	65.5	42.4	39.2		17.2	94.7	3.9	637.1	0.28	0.23	0.82
6	10	89.4	47.0	71.3	35.7	38.1		25.9	108.0	4.5	632.2	0.33	0.25	0.79
6	11	92.3	51.1	71.3	38.3	42.6		41.3	127.1	5.3	523.9	0.35	0.26	0.77
6	12	69.0	54.8	61.3	76.6	53.5	0.19	24.0	180.5	7.5	238.9	0.14	0.11	0.79
6	13	75.8	51.6	63.5	54.8	44.4		18.8	120.1	5.0	557.9	0.25	0.20	0.80
6	14	82.5	47.8	65.4	50.0	43.7		15.3	72.3	3.0	648.6	0.25	0.21	0.81
6	15	88.0	49.4	70.7	53.6	49.2		15.4	80.7	3.4	688.2	0.28	0.24	0.82
6	16	92.0	54.7	72.4	48.1	49.7	0.03	36.7	138.6	5.8	527.9	0.34	0.25	0.81
6	17	95.3	50.8	75.5	39.4	44.9		20.7	109.8	4.6	654.3	0.36	0.27	0.79
6	18	80.5	52.8	68.0	39.2	40.6		19.2	161.5	6.7	711.3	0.35	0.27	0.77
6	19	88.7	50.4	70.7	38.6	41.3		20.9	99.7	4.2	681.8	0.32	0.26	0.77
6	20	94.8	49.8	75.8	38.0	43.1		20.8	97.4	4.1	571.0	0.32	0.25	0.79
6	21	94.6	55.1	75.8	35.9	43.8		22.3	109.0	4.5	524.7	0.33	0.25	0.78
6	22	87.1	54.5	69.1	48.3	47.4		34.9	132.8	5.5	538.4	0.32	0.24	0.77
6	23	91.3	46.4	72.7	42.7	44.2		18.0	107.9	4.5	657.6	0.33	0.26	0.79

TABLE B3
NCWCD WEATHER STATION DATA
LONGMONT SOUTH
2007

Date		Temperature			Relative Humidity	Dew Point	Precipitation	Wind			Solar Radiation	ASCE Calculation		Calculation Pan
Month	Day	Max. (°F)	Min. (°F)	Average (°F)	Average (%)	Average (°F)	Total (inch)	Max (mph)	Total (miles)	Average (mph)	Total (Langl)	ET_r Alfalfa (inch)	ET_o Grass (inch)	(Kp)
6	24	96.4	53.2	76.8	36.7	45.0		77.7	143.5	6.0	466.1	0.37	0.27	0.78
6	25	96.2	53.9	80.0	32.2	44.2		25.4	143.2	6.0	666.1	0.40	0.30	0.76
6	26	78.7	60.7	68.1	58.8	52.9		23.4	116.9	4.9	375.0	0.22	0.17	0.78
6	27	76.1	56.1	65.8	74.8	57.3		15.3	91.9	3.8	332.4	0.15	0.13	0.83
6	28	81.1	56.3	68.5	67.8	56.5		19.9	104.0	4.3	507.8	0.22	0.18	0.84
6	29	86.2	52.5	69.6	58.0	53.2		13.6	93.0	3.9	584.7	0.26	0.21	0.83
6	30	89.3	51.6	74.6	47.4	51.8		18.3	95.4	4.0	671.4	0.29	0.24	0.83
7	1	94.2	57.6	76.0	50.9	54.9		24.3	113.6	4.7	687.5	0.34	0.27	0.81
7	2	89.7	58.9	76.4	52.6	56.6		14.3	97.5	4.1	661.7	0.29	0.25	0.81
7	3	91.7	57.3	71.8	58.3	55.1	0.01	28.9	134.8	5.6	458.4	0.31	0.23	0.81
7	4	86.3	58.4	72.7	55.5	54.8		29.8	100.7	4.2	669.7	0.29	0.24	0.81
7	5	89.1	55.7	72.7	49.0	50.8		21.5	93.9	3.9	551.5	0.28	0.22	0.81
7	6	90.6	55.2	75.6	40.6	46.2		20.2	122.5	5.1	683.7	0.35	0.27	0.79
7	7	93.8	56.0	76.7	36.2	46.3		38.4	152.1	6.3	537.1	0.38	0.27	0.77
7	8	84.2	59.1	71.5	53.1	52.8	0.11	37.8	104.5	4.4	473.4	0.25	0.20	0.78
7	9	89.1	55.0	71.8	57.5	54.1		12.7	59.8	2.5	643.5	0.25	0.22	0.82
7	10	79.5	57.6	69.1	61.7	55.0	0.24	38.4	194.3	8.1	448.4	0.25	0.19	0.81
7	11	79.6	57.0	67.2	74.3	58.4		13.2	95.9	4.0	474.4	0.19	0.17	0.81
7	12	81.2	57.5	67.5	69.7	56.7	0.01	24.0	121.6	5.1	412.6	0.21	0.17	0.83
7	13	87.0	52.2	71.3	51.3	49.2		23.7	88.0	3.7	655.7	0.28	0.23	0.82
7	14	87.3	57.1	72.4	47.1	50.1		30.4	97.3	4.1	585.7	0.28	0.23	0.81
7	15	91.6	53.8	74.6	45.0	49.8		11.9	68.9	2.9	576.2	0.26	0.22	0.81
7	16	94.1	56.7	76.8	40.0	49.0		13.8	85.6	3.6	564.0	0.29	0.23	0.81
7	17	95.9	57.7	77.6	40.4	50.1		25.9	121.9	5.1	503.4	0.34	0.25	0.79
7	18	92.6	58.3	77.6	43.1	52.2		24.3	135.2	5.6	521.7	0.33	0.25	0.78
7	19	86.2	60.6	72.1	66.3	59.9		21.4	86.3	3.6	492.3	0.22	0.19	0.81
7	20	91.0	61.8	74.8	60.4	57.9		16.1	91.9	3.8	643.8	0.29	0.24	0.83
7	21	94.8	59.6	78.5	46.0	53.4		18.6	104.9	4.4	603.4	0.32	0.25	0.81
7	22	98.0	58.9	80.4	39.6	49.6		21.9	116.9	4.9	670.0	0.37	0.29	0.79

TABLE B3
NCWCD WEATHER STATION DATA
LONGMONT SOUTH
2007

Date		Temperature			Relative Humidity	Dew Point	Precipitation Total	Wind			Solar Radiation	ASCE Calculation		Calculation Pan
Month	Day	Max. (°F)	Min. (°F)	Average (°F)	Average (%)	Average (°F)	(inch)	Max (mph)	Total (miles)	Average (mph)	Total (Langl)	ET_r Alfalfa (inch)	ET_o Grass (inch)	(Kp)
7	23	95.1	60.9	79.9	39.4	51.0		27.0	113.9	4.7	650.4	0.35	0.27	0.78
7	24	95.5	62.7	79.9	41.5	51.6		18.6	112.7	4.7	632.9	0.35	0.27	0.78
7	25	94.4	64.2	77.9	43.0	52.2		35.1	136.1	5.7	536.8	0.36	0.26	0.77
7	26	86.9	63.1	73.8	55.1	56.0		16.8	125.0	5.2	565.8	0.29	0.23	0.78
7	27	82.4	61.0	69.5	74.2	60.2	0.14	25.1	106.6	4.4	415.4	0.20	0.16	0.81
7	28	81.9	62.5	70.8	71.8	60.3	0.09	13.2	62.3	2.6	494.2	0.19	0.17	0.84
7	29	83.4	58.9	70.3	67.5	58.1		17.7	90.6	3.8	575.9	0.23	0.20	0.84
7	30	87.4	55.9	72.3	56.2	54.7		24.4	96.5	4.0	594.8	0.26	0.22	0.83
7	31	88.7	55.5	73.5	54.2	54.7		11.0	84.3	3.5	623.3	0.26	0.22	0.83
8	1	89.3	60.2	73.0	60.6	56.6		34.1	122.1	5.1	608.2	0.30	0.24	0.82
8	2	84.8	61.4	71.2	68.6	59.6	0.33	22.1	144.8	6.0	483.0	0.25	0.20	0.81
8	3	87.9	63.3	72.5	72.9	62.4		19.6	94.0	3.9	501.1	0.23	0.19	0.82
8	4	88.8	62.2	74.1	64.2	59.5	0.11	25.8	132.0	5.5	583.9	0.29	0.23	0.82
8	5	90.4	59.8	73.1	62.8	57.5	0.03	24.0	112.5	4.7	524.9	0.28	0.22	0.81
8	6	81.0	60.3	69.7	71.5	59.4		19.2	101.5	4.2	314.8	0.17	0.14	0.82
8	7	80.2	58.8	68.6	69.2	57.3		19.4	90.5	3.8	322.3	0.17	0.13	0.84
8	8	91.8	52.7	73.2	50.0	49.4		18.3	88.2	3.7	577.4	0.28	0.22	0.82
8	9	91.5	56.5	74.5	43.1	48.1	0.01	22.4	101.5	4.2	544.1	0.30	0.23	0.80
8	10	91.0	56.0	74.5	48.3	51.6		22.1	120.0	5.0	555.6	0.30	0.23	0.79
8	11	89.3	52.9	75.6	40.6	46.6		17.5	134.3	5.6	642.7	0.33	0.25	0.79
8	12	92.8	59.2	76.6	45.5	53.1		15.9	95.5	4.0	557.1	0.29	0.22	0.79
8	13	97.2	58.1	78.4	42.0	51.4		27.6	121.8	5.1	591.4	0.35	0.26	0.79
8	14	90.9	63.8	75.2	52.3	55.3	0.25	21.3	114.2	4.8	477.4	0.29	0.22	0.79
8	15	82.5	61.6	69.5	69.5	58.5	0.13	19.7	108.1	4.5	369.0	0.20	0.16	0.81
8	16	85.1	57.1	72.1	62.2	57.1		13.6	74.5	3.1	613.8	0.23	0.20	0.83
8	17	86.2	58.5	70.5	67.1	58.4		25.9	112.8	4.7	454.4	0.23	0.18	0.83
8	18	88.0	57.9	71.7	63.2	57.2	0.01	21.3	110.3	4.6	458.9	0.24	0.19	0.82
8	19	90.5	55.3	72.1	60.3	56.1	0.01	27.0	98.8	4.1	513.2	0.26	0.20	0.82
8	20	93.0	57.9	76.7	41.1	47.6		26.0	158.0	6.6	632.9	0.38	0.28	0.79

TABLE B3
NCWCD WEATHER STATION DATA
LONGMONT SOUTH
2007

Date		Temperature			Relative Humidity	Dew Point	Precipitation Total	Wind			Solar Radiation	ASCE Calculation		Calculation Pan
Month	Day	Max. (°F)	Min. (°F)	Average (°F)	Average (%)	Average (°F)	(inch)	Max (mph)	Total (miles)	Average (mph)	Total (Langl)	ET_r Alfalfa (inch)	ET_o Grass (inch)	(Kp)
8	21	93.6	51.5	75.8	36.8	44.9		18.3	97.9	4.1	618.0	0.31	0.24	0.77
8	22	81.9	56.9	70.6	56.1	54.1		19.4	111.3	4.6	518.1	0.23	0.19	0.80
8	23	72.6	58.1	63.6	69.6	53.4	0.22	24.0	136.2	5.7	439.5	0.19	0.15	0.81
8	24	80.4	55.6	65.6	68.7	53.8	0.05	23.3	122.6	5.1	581.5	0.24	0.19	0.81
8	25	83.9	49.6	67.0	68.5	55.6		11.0	67.1	2.8	604.8	0.21	0.18	0.84
8	26	93.6	53.0	74.5	41.7	46.3		32.1	120.7	5.0	460.2	0.31	0.22	0.82
8	27	86.4	56.8	70.3	55.8	52.5	0.13	28.0	123.9	5.2	333.9	0.24	0.17	0.79
8	28	83.5	55.7	67.0	73.1	57.1	0.05	15.4	82.8	3.5	453.2	0.19	0.16	0.82
8	29	80.5	55.3	67.0	72.4	57.5		15.7	76.2	3.2	458.0	0.17	0.15	0.85
8	30	84.2	53.5	68.9	66.9	56.0		11.0	72.0	3.0	541.9	0.20	0.17	0.85
8	31	88.2	52.5	71.3	52.3	51.4		22.4	92.0	3.8	433.3	0.23	0.17	0.84
9	1	89.0	54.9	70.8	53.1	51.1		21.5	95.9	4.0	382.5	0.23	0.17	0.82
9	2	90.8	57.7	72.9	48.5	50.0		22.6	107.2	4.5	471.7	0.28	0.20	0.80
9	3	90.0	52.4	70.2	48.7	47.9		19.1	115.7	4.8	346.0	0.26	0.19	0.79
9	4	89.9	53.4	71.2	47.3	48.0		26.2	93.3	3.9	497.9	0.26	0.20	0.80
9	5	84.2	53.3	69.1	54.9	51.0		29.6	132.9	5.5	336.2	0.23	0.17	0.80
9	6	85.0	57.1	69.4	50.7	47.3		37.0	224.2	9.3	484.7	0.36	0.25	0.77
9	7	81.4	52.3	67.1	45.3	43.7		21.1	129.9	5.4	543.5	0.27	0.20	0.75
9	8	83.9	47.7	64.3	52.5	44.4		28.1	144.6	6.0	493.3	0.28	0.20	0.78
9	9	61.5	46.3	52.6	73.1	44.2		25.4	135.7	5.7	310.2	0.13	0.10	0.80
9	10	61.5	45.1	51.9	77.0	44.5	0.03	14.4	101.9	4.2	327.1	0.11	0.09	0.83
9	11	81.4	39.2	60.0	49.6	36.9		14.8	86.4	3.6	544.4	0.23	0.17	0.83
9	12	87.0	44.3	67.6	34.4	34.7		15.3	91.8	3.8	519.0	0.26	0.19	0.80
9	13	71.7	46.3	60.4	49.3	41.0		18.3	88.0	3.7	486.7	0.18	0.14	0.80
9	14	63.9	43.6	54.0	65.4	42.2		11.8	104.3	4.3	314.5	0.13	0.10	0.82
9	15	88.6	44.5	67.7	43.4	40.5		21.2	136.7	5.7	461.2	0.30	0.21	0.81
9	16	87.1	54.2	67.3	48.2	45.8	0.01	35.6	142.0	5.9	348.2	0.29	0.20	0.78
9	17	74.1	56.1	63.7	56.6	47.3	0.08	30.9	146.8	6.1	299.2	0.20	0.14	0.78
9	18	76.9	50.6	63.9	32.3	32.3		18.7	111.1	4.6	434.3	0.24	0.17	0.76

TABLE B3
NCWCD WEATHER STATION DATA
LONGMONT SOUTH
2007

Date		Temperature			Relative Humidity	Dew Point	Precipitation Total	Wind			Solar Radiation	ASCE Calculation		Calculation Pan
Month	Day	Max. (°F)	Min. (°F)	Average (°F)	Average (%)	Average (°F)	(inch)	Max (mph)	Total (miles)	Average (mph)	Total (Langl)	ET_r Alfalfa (inch)	ET_o Grass (inch)	(Kp)
9	19	78.8	44.1	61.1	52.8	41.9		15.8	103.3	4.3	497.5	0.22	0.16	0.78
9	20	86.0	45.6	67.4	46.5	41.2		17.9	90.1	3.8	479.0	0.23	0.17	0.81
9	21	86.2	52.7	71.4	27.7	34.3		33.7	206.7	8.6	493.2	0.38	0.25	0.75
9	22	87.0	44.0	67.3	43.4	41.9		18.1	98.6	4.1	453.0	0.24	0.17	0.75
9	23	72.8	55.8	63.4	58.2	48.3	0.17	20.6	140.1	5.8	191.8	0.17	0.12	0.80
9	24	57.0	42.4	49.8	91.9	47.7	1.77	16.7	87.4	3.6	74.5	0.04	0.04	0.83
9	25	66.0	41.7	51.6	70.2	40.9		13.2	81.8	3.4	456.2	0.14	0.11	0.85
9	26	74.4	39.9	56.3	53.1	36.5		14.8	95.0	4.0	488.1	0.19	0.14	0.82
9	27	73.3	41.0	57.1	47.4	35.0		15.6	88.4	3.7	479.3	0.18	0.14	0.81
9	28	76.3	43.4	60.1	51.3	41.2		15.3	94.4	3.9	321.1	0.17	0.12	0.81
9	29	74.8	49.5	62.6	45.0	40.0		31.6	137.0	5.7	280.0	0.20	0.14	0.80
9	30	71.5	42.6	57.1	39.1	31.6		35.4	144.3	6.0	465.0	0.23	0.16	0.77
10	1	76.7	36.3	57.8	51.2	37.8		19.9	103.1	4.3	281.5	0.17	0.12	0.79
10	2	73.1	45.1	59.1	34.9	30.5		41.4	149.9	6.2	464.9	0.25	0.17	0.78
10	3	82.3	38.4	61.0	36.6	30.8		19.0	104.2	4.3	401.0	0.23	0.16	0.76
10	4	80.9	40.9	62.0	37.5	32.7		22.3	133.5	5.6	441.9	0.26	0.17	0.77
10	5	83.6	41.5	63.4	47.3	40.6		26.1	125.3	5.2	412.3	0.24	0.17	0.78
10	6	83.4	48.4	65.3	37.8	36.2		35.2	207.1	8.6	438.4	0.34	0.22	0.76
10	7	57.2	36.1	47.5	57.3	32.4		28.4	171.2	7.1	332.8	0.14	0.10	0.75
10	8	73.5	32.0	51.9	48.0	30.3		26.2	81.4	3.4	434.3	0.17	0.12	0.80
10	9	73.8	34.7	54.2	46.1	32.1		7.7	66.2	2.8	419.2	0.15	0.11	0.82
10	10	72.3	38.4	55.4	45.8	33.6		12.7	72.4	3.0	409.3	0.15	0.11	0.82
10	11	77.3	37.3	57.3	50.9	37.0		12.7	82.2	3.4	404.0	0.17	0.12	0.82
10	12	61.7	39.5	51.3	69.1	41.6		11.6	61.0	2.5	316.7	0.09	0.07	0.84
10	13	57.6	44.4	50.7	86.3	46.8	0.18	19.5	108.9	4.5	125.1	0.06	0.05	0.86
10	14	45.4	38.4	41.9	89.6	39.1	0.75	15.3	108.5	4.5	73.0	0.04	0.03	0.85
10	15	60.8	38.3	46.8	72.6	37.4	0.01	9.6	64.7	2.7	385.0	0.10	0.08	0.85
10	16	60.0	33.4	44.6	82.1	39.3		16.7	62.4	2.6	298.6	0.08	0.06	0.86
10	17	62.7	39.2	49.8	50.1	31.2		30.0	187.9	7.8	267.1	0.18	0.12	0.81

TABLE B3
NCWCD WEATHER STATION DATA
LONGMONT SOUTH
2007

Date		Temperature			Relative Humidity	Dew Point	Precipitation Total	Wind			Solar Radiation	ASCE Calculation		Calculation Pan
Month	Day	Max. (°F)	Min. (°F)	Average (°F)	Average (%)	Average (°F)	(inch)	Max (mph)	Total (miles)	Average (mph)	Total (Langl)	ET_r Alfalfa (inch)	ET_o Grass (inch)	(Kp)
10	18	55.0	38.3	48.3	29.4	17.7		36.5	363.2	15.1	388.6	0.25	0.16	0.69
10	19	73.9	44.9	59.4	33.4	30.2		29.4	175.4	7.3	352.8	0.25	0.16	0.67
10	20	77.9	39.4	61.3	33.0	28.3	0.02	36.5	234.9	9.8	321.5	0.32	0.20	0.71
10	21	44.4	28.0	36.7	74.0	29.1	0.34	30.0	186.3	7.8	171.7	0.07	0.05	0.75
10	22	53.9	25.6	39.7	48.0	20.0		15.3	94.0	3.9	374.1	0.11	0.08	0.80
10	23	71.5	32.5	49.5	52.7	31.0		11.1	73.0	3.0	363.3	0.14	0.09	0.81
10	24	79.1	33.7	53.4	46.8	30.1		11.5	64.3	2.7	370.0	0.15	0.10	0.82
10	25	78.6	33.0	54.6	41.3	28.6		8.6	67.9	2.8	370.8	0.15	0.10	0.81
10	26	54.8	36.5	45.9	59.2	32.5		16.2	114.1	4.8	300.7	0.10	0.07	0.81
10	27	47.9	34.1	40.4	76.4	33.5		10.9	54.6	2.3	151.0	0.05	0.04	0.84
10	28	70.8	32.9	48.4	66.7	35.7		7.8	58.5	2.4	292.2	0.10	0.08	0.86
10	29	74.6	33.0	54.1	45.7	31.1		11.6	75.4	3.1	267.3	0.14	0.09	0.84
10	30	75.6	40.8	56.6	40.8	30.8		31.6	183.1	7.6	280.8	0.26	0.16	0.78
10	31	50.6	29.5	39.7	70.9	30.2	0.01	16.0	86.5	3.6	235.9	0.07	0.05	0.79
11	1	64.9	25.4	45.6	58.2	29.1		13.0	59.0	2.5	282.7			
11	2	49.0	27.5	39.4	49.8	21.5		19.1	86.4	3.6	273.0			
11	3	68.2	21.3	42.1	49.4	21.4		20.4	90.5	3.8	279.1			
11	4	74.7	27.9	53.8	31.9	18.6		35.7	227.7	9.5	282.0			
11	5	60.4	26.2	42.3	51.7	24.0		29.3	120.0	5.0	230.7			
11	6	55.6	22.1	35.9	64.9	24.3		8.9	59.6	2.5	265.2			
11	7	73.3	23.9	49.2	38.7	18.2		28.3	159.4	6.6	271.8			
11	8	72.8	42.3	57.5	20.1	15.3		26.7	188.0	7.8	261.2			
11	9	67.4	29.5	48.2	37.1	21.6		8.0	27.6	1.1	239.0			
11	10	69.8	35.8	50.7	41.4	27.4		18.3	62.2	2.6	169.5			
11	11	70.1	41.0	53.3	41.4	28.9		18.9	122.4	5.1	244.8			
11	12	54.8	34.0	43.4	66.0	32.6		16.9	81.4	3.4	110.6			
11	13	68.0	27.1	48.9	52.9	28.4		40.2	156.8	6.5	147.3			
11	14	43.2	19.4	33.7	61.7	21.5	0.02	14.0	82.5	3.4	180.1			
11	15	59.6	15.2	36.1	55.8	19.9		22.1	72.9	3.0	217.4			

TABLE B3
NCWCD WEATHER STATION DATA
LONGMONT SOUTH
2007

Date		Temperature			Relative Humidity	Dew Point	Precipitation Total	Wind			Solar Radiation	ASCE Calculation		Calculation Pan
Month	Day	Max. (°F)	Min. (°F)	Average (°F)	Average (%)	Average (°F)	(inch)	Max (mph)	Total (miles)	Average (mph)	Total (Langl)	ET_r Alfalfa (inch)	ET_o Grass (inch)	(Kp)
11	16	69.5	36.8	57.1	25.4	21.3		25.2	148.8	6.2	127.9			
11	17	63.4	36.5	47.1	47.0	27.6		16.9	97.9	4.1	76.4			
11	18	68.4	42.6	59.1	25.4	23.0		33.8	194.5	8.1	151.0			
11	19	78.1	38.7	59.9	21.3	18.2		36.2	206.0	8.6	232.9			
11	20	61.6	28.3	37.1	57.5	21.7		25.8	132.1	5.5	98.0			
11	21	28.7	10.8	22.1	92.0	20.4	0.01	10.7	61.6	2.6	119.7			
11	22	30.4	10.8	20.8	87.5	17.7	0.08	9.1	32.4	1.4	208.5			
11	23	28.9	17.2	22.8	76.4	16.3		14.9	91.6	3.8	119.2			
11	24	44.5	9.6	27.0	59.9	13.2	0.03	14.3	82.8	3.5	241.2			
11	25	51.5	18.2	32.9	61.3	20.1		12.9	71.5	3.0	195.0			
11	26	42.7	19.5	29.8	68.6	20.4		13.3	75.1	3.1	215.4			
11	27	59.3	17.6	37.5	51.5	17.7		29.9	134.0	5.6	231.6			
11	28	40.8	19.9	31.3	49.7	13.8	0.01	29.9	142.3	5.9	210.8			
11	29	55.3	14.1	31.2	48.3	12.0		39.7	116.5	4.9	219.9			
11	30	30.3	12.6	20.2	70.7	12.1		14.5	68.5	2.9	192.6			
12	1	37.3	18.7	26.0	76.9	19.6		18.0	84.3	3.5	155.3			
12	2	45.0	17.2	29.6	52.7	11.0		26.7	109.0	4.5	174.3			
12	3	61.1	21.1	44.0	35.7	15.6		40.4	209.5	8.7	119.1			
12	4	71.6	54.0	62.0	18.2	17.7		39.2	362.8	15.1	208.1			
12	5	55.2	34.6	45.2	44.4	24.2		30.1	72.9	3.0	193.0			
12	6	54.5	30.1	41.8	56.9	26.5	0.01	24.5	105.3	4.4	194.3			
12	7	39.2	27.1	31.0	96.0	30.0	0.16	18.4	176.8	7.4	20.9			
12	8	27.7	1.7	19.1	92.7	17.9		16.6	148.1	6.2	58.5			
12	9	22.9	0.3	9.6	88.3	7.6		7.5	35.7	1.5	101.8			
12	10	29.8	3.0	20.7	86.6	17.8	0.01	13.2	106.5	4.4	219.1			
12	11	24.9	17.1	20.7	90.5	18.4	0.01	14.3	88.8	3.7	163.6			
12	12	30.4	-1.8	14.3	85.5	11.5	0.10	11.0	37.0	1.5	212.4			
12	13	28.2	3.0	17.4	78.3	11.9		11.9	70.1	2.9	178.7			
12	14	22.9	-1.1	15.3	84.8	12.2		12.7	75.2	3.1	131.6			

TABLE B3
NCWCD WEATHER STATION DATA
LONGMONT SOUTH
2007

Date		Temperature			Relative Humidity	Dew Point	Precipitation Total	Wind			Solar Radiation	ASCE Calculation		Calculation Pan
Month	Day	Max. (°F)	Min. (°F)	Average (°F)	Average (%)	Average (°F)	(inch)	Max (mph)	Total (miles)	Average (mph)	Total (Langl)	ET_r Alfalfa (inch)	ET_o Grass (inch)	(Kp)
12	15	31.2	-4.1	11.1	70.0	2.8	0.02	14.7	66.7	2.8	219.1			
12	16	39.2	5.7	21.4	63.5	10.7	0.01	15.6	82.6	3.4	222.7			
12	17	42.4	7.1	25.2	61.8	13.8		19.6	96.4	4.0	211.8			
12	18	50.2	16.7	29.9	57.1	15.7		21.6	99.1	4.1	209.2			
12	19	45.0	15.3	32.3	57.1	17.9		26.3	137.9	5.7	189.2			
12	20	44.1	21.8	30.7	62.9	19.3		11.6	80.3	3.3	191.7			
12	21	38.1	20.1	28.0	65.1	17.9		33.5	189.7	7.9	153.0			
12	22	34.6	9.1	19.5	61.5	7.7		11.5	97.4	4.1	223.6			
12	23	46.5	7.5	23.7	59.1	10.3		25.5	128.1	5.3	200.5			
12	24	35.7	7.0	23.0	68.1	14.1		9.6	58.7	2.4	158.1			
12	25	32.1	11.0	24.8	80.4	19.7		28.1	192.3	8.0	84.9			
12	26	29.0	1.3	11.5	81.5	7.1	0.01	8.8	52.3	2.2	207.3			
12	27	19.4	2.4	15.5	88.4	13.0		22.6	198.8	8.3	126.2			
12	28	26.3	-1.5	11.3	62.7	0.5	0.02	35.3	124.1	5.2	223.9			
12	29	31.1	-1.6	21.4	43.4	2.5		40.1	241.0	10.0	227.2			
12	30	41.0	18.5	29.8	46.9	12.1		27.7	184.2	7.7	211.1			
12	31	32.5	9.7	21.5	33.1	-3.3		29.9	226.0	9.4	233.0			
							9.99						**40.58**	

TABLE B4
NCWCD WEATHER STATION DATA
LONGMONT SOUTH
2006

Date		Temperature			Relative Humidity	Dew Point	Precipitation Total	Wind			Solar Radiation	ASCE Calculation		Calculation Pan
Month	Day	Max. (°F)	Min. (°F)	Average (°F)	Average (%)	Average (°F)	(inch)	Max (mph)	Total (miles)	Average (mph)	Total (Langl)	ET_r Alfalfa (inch)	ET_o Grass (inch)	(Kp)
1	4	46.6	25.2	35.3	46.3	16.5	0.01	17.6	120.2	5.0	159.2			
1	5	53.3	22.3	36.4	33.8	8.8		19.2	84.4	3.5	234.6			
1	6	68.9	30.8	55.6	19.6	13.3		27.9	255.3	10.6	237.2			
1	7	70.1	34.4	54.3	18.7	10.6	0.01	44.0	292.1	12.2	226.1			
1	8	52.5	29.1	42.8	29.1	13.4		51.2	333.7	13.9	231.2			
1	9	48.8	23.4	33.6	39.4	10.6	0.01	14.8	103.1	4.3	236.9			
1	10	61.3	20.9	43.6	25.0	5.4		38.9	255.8	10.7	227.5			
1	11	62.4	33.4	51.8	17.9	8.5		36.8	200.8	8.4	165.4			
1	12	53.9	19.4	37.5	28.5	7.4	0.01	38.6	281.8	11.7	197.3			
1	13	50.3	14.7	31.9	38.2	7.9		13.2	66.1	2.8	247.5			
1	14	58.9	22.4	42.2	35.1	15.1		19.9	116.3	4.8	180.7			
1	15	58.1	36.1	47.8	23.1	10.7		34.7	246.1	10.3	232.7			
1	16	37.7	14.3	28.7	62.0	17.3	0.01	25.4	123.6	5.2	141.9			
1	17	52.8	17.2	39.8	28.0	9.7		36.6	354.8	14.8	216.6			
1	18	61.3	37.2	49.6	30.4	18.6		45.4	377.1	15.7	257.4			
1	19	39.4	25.8	30.2	82.1	24.9	0.21	18.3	90.9	3.8	71.0			
1	20	39.4	13.2	26.1	63.9	14.6		11.4	87.6	3.6	254.6			
1	21	43.0	10.1	27.6	53.7	12.1		12.3	77.8	3.2	276.1			
1	22	41.4	17.8	29.0	50.9	12.2		17.2	91.5	3.8	276.4			
1	23	54.0	11.6	29.0	52.2	12.3		8.3	58.2	2.4	272.0			
1	24	58.1	19.6	37.1	42.4	12.8		13.2	89.3	3.7	279.1			
1	25	55.3	19.9	35.6	44.9	14.1		7.7	59.2	2.5	230.0			
1	26	52.6	23.3	38.2	40.0	14.0		41.5	182.8	7.6	219.7			
1	27	51.5	22.4	37.5	38.0	12.7		18.2	101.7	4.2	226.7			
1	28	47.5	20.4	36.0	35.4	9.5		41.4	206.0	8.6	272.1			
1	29	45.8	22.6	36.2	31.5	7.7		31.9	211.3	8.8	284.0			
1	30	53.0	19.2	36.2	41.0	14.2		31.5	113.9	4.7	254.1			
1	31	59.9	23.4	38.2	52.7	20.2		37.6	139.3	5.8	286.9			
2	1	55.7	19.2	35.5	60.8	21.6		42.4	154.4	6.4	191.5			

TABLE B4
NCWCD WEATHER STATION DATA
LONGMONT SOUTH
2006

Date		Temperature			Relative Humidity	Dew Point	Precipitation Total	Wind			Solar Radiation	ASCE Calculation		Calculation Pan
Month	Day	Max. (°F)	Min. (°F)	Average (°F)	Average (%)	Average (°F)	(inch)	Max (mph)	Total (miles)	Average (mph)	Total (Langl)	ET_r Alfalfa (inch)	ET_o Grass (inch)	(Kp)
2	2	47.9	27.8	39.5	31.4	11.6	0.01	26.9	226.3	9.4	216.8			
2	3	49.6	19.5	34.1	41.7	12.2		33.2	158.8	6.6	206.4			
2	4	50.9	17.2	33.3	50.7	15.1		17.2	80.2	3.3	247.8			
2	5	47.3	22.4	39.2	29.5	9.8		41.0	339.1	14.1	287.3			
2	6	48.0	16.6	32.7	30.9	2.8		16.8	104.0	4.3	326.3			
2	7	55.2	12.8	36.7	33.2	6.7		14.3	109.7	4.6	328.0			
2	8	64.8	22.3	42.5	28.3	8.6		23.7	132.7	5.5	262.5			
2	9	62.1	22.0	41.2	37.6	13.3	0.07	33.3	241.2	10.1	159.9			
2	10	29.8	7.0	20.1	68.6	11.1	0.04	20.7	105.4	4.4	290.5			
2	11	42.0	2.3	22.1	44.6	0.9		13.7	84.4	3.5	348.5			
2	12	55.1	13.1	34.4	38.5	9.0		13.7	98.4	4.1	349.7			
2	13	56.7	22.5	37.8	37.8	11.7		17.5	116.4	4.8	261.9			
2	14	61.1	25.8	42.8	33.2	12.4		35.0	223.9	9.3	352.7			
2	15	32.8	20.4	26.4	81.8	21.6	0.13	27.8	98.7	4.1	121.0			
2	16	20.9	4.7	12.1	77.4	6.9	0.03	15.9	88.7	3.7	342.7			
2	17	7.5	-10.0	0.4	78.1	-4.0	0.02	22.8	108.1	4.5	297.5			
2	18	6.1	-15.2	-4.2	71.8	-10.7		6.6	24.4	1.0	348.2			
2	19	20.1	-7.3	6.9	73.1	0.7		9.1	52.7	2.2	371.5			
2	20	40.0	2.2	25.6	50.6	7.1		34.3	246.0	10.3	402.6			
2	21	42.5	13.8	28.6	46.2	9.8		19.3	136.3	5.7	397.4			
2	22	44.9	11.4	30.8	47.0	10.5		30.1	171.0	7.1	401.4			
2	23	55.9	23.8	42.1	28.3	9.7		30.5	224.8	9.4	406.5			
2	24	59.9	26.7	45.2	26.6	10.0		33.6	225.1	9.4	416.7			
2	25	43.2	20.8	30.6	70.2	21.3		11.5	49.2	2.0	322.3			
2	26	61.4	17.9	39.7	49.4	18.9		14.3	95.8	4.0	326.1			
2	27	72.8	35.3	56.9	18.9	13.4		40.7	183.2	7.6	367.4			
2	28	77.1	34.9	56.9	31.1	25.2		34.5	221.3	9.2	324.7			
3	1	58.7	31.2	50.0	26.5	17.0		39.6	256.6	10.7	368.4	0.22	0.15	0.71
3	2	57.9	24.5	40.2	30.7	10.4		12.9	82.1	3.4	390.3	0.14	0.1	0.72

TABLE B4
NCWCD WEATHER STATION DATA
LONGMONT SOUTH
2006

Date		Temperature			Relative Humidity	Dew Point	Precipitation Total	Wind			Solar Radiation	ASCE Calculation		Calculation Pan
Month	Day	Max. (°F)	Min. (°F)	Average (°F)	Average (%)	Average (°F)	(inch)	Max (mph)	Total (miles)	Average (mph)	Total (Langl)	ET_r Alfalfa (inch)	ET_o Grass (inch)	(Kp)
3	3	58.4	25.5	40.9	46.4	21.0		11.2	85.4	3.6	392.9	0.13	0.09	0.79
3	4	68.4	21.9	45.5	40.8	17.9		33.8	194.9	8.1	412.1	0.26	0.17	0.78
3	5	65.2	25.7	44.7	32.4	14.0		13.2	93.5	3.9	447.0	0.17	0.12	0.75
3	6	71.0	29.0	49.9	26.4	13.3		15.9	91.5	3.8	395.5	0.19	0.13	0.75
3	7	65.1	36.5	54.3	23.0	15.8		39.2	297.7	12.4	460.9	0.31	0.20	0.69
3	8	46.3	22.2	35.1	80.4	28.8	0.39	17.3	101.2	4.2	80.6	0.05	0.04	0.75
3	9	44.3	17.3	30.5	79.1	24.3	0.16	20.6	76.4	3.2	316.9	0.06	0.05	0.86
3	10	30.6	24.8	27.6	73.9	20.4		20.5	90.5	3.8	199.5	0.05	0.04	0.85
3	11	33.8	23.1	28.5	76.0	21.8	0.04	19.5	122.1	5.1	215.9	0.05	0.04	0.84
3	12	30.3	22.1	27.3	90.4	24.9	0.09	16.4	118.8	5.0	145.2	0.03	0.02	0.84
3	13	40.4	19.6	27.4	70.1	18.3	0.02	30.3	123.8	5.2	446.8	0.09	0.07	0.83
3	14	52.3	19.2	35.3	43.0	12.8		15.2	105.6	4.4	501.8	0.14	0.10	0.80
3	15	57.3	21.3	37.3	43.4	15.5		56.1	311.8	13.0	469.4	0.24	0.16	0.74
3	16	52.9	24.9	39.6	28.8	8.7		35.7	186.9	7.8	445.0	0.19	0.13	0.70
3	17	47.5	22.4	35.0	49.1	17.0		15.4	112.5	4.7	368.2	0.11	0.08	0.75
3	18	48.7	19.6	35.1	68.1	25.1	0.04	24.8	147.8	6.2	459.0	0.11	0.08	0.81
3	19	40.7	26.8	34.6	90.2	32.0	0.15	21.2	147.8	6.2	130.0	0.04	0.03	0.83
3	20	27.3	18.0	21.5	87.3	18.4	0.07	17.6	170.3	7.1	303.6	0.04	0.04	0.82
3	21	27.7	13.4	20.7	82.8	16.3	0.04	12.5	61.9	2.6	379.5	0.05	0.04	0.85
3	22	34.1	19.0	26.0	84.3	22.2		10.8	63.8	2.7	316.1	0.05	0.05	0.87
3	23	47.0	25.4	34.0	75.0	25.9		15.9	80.8	3.4	463.1	0.09	0.08	0.86
3	24	59.5	24.4	40.9	54.5	22.4		20.6	106.1	4.4	489.1	0.16	0.12	0.83
3	25	64.8	24.5	43.4	59.8	28.4		20.8	107.6	4.5	450.0	0.17	0.12	0.82
3	26	54.5	33.0	41.8	52.8	22.8		51.2	304.9	12.7	382.2	0.21	0.14	0.76
3	27	54.6	27.3	42.2	37.7	17.4		33.0	162.0	6.8	511.4	0.18	0.13	0.72
3	28	68.4	25.5	46.9	44.7	23.3		12.6	69.6	2.9	520.9	0.17	0.13	0.79
3	29	73.0	33.3	53.0	39.2	25.6		34.8	212.5	8.9	514.0	0.31	0.21	0.77
3	30	60.8	34.2	47.5	39.1	21.2		38.6	224.3	9.3	506.8	0.25	0.17	0.72
3	31	66.9	27.9	48.5	33.1	17.5		19.6	117.6	4.9	526.1	0.22	0.16	0.73

TABLE B4
NCWCD WEATHER STATION DATA
LONGMONT SOUTH
2006

Date		Temperature			Relative Humidity	Dew Point	Precipitation Total	Wind			Solar Radiation	ASCE Calculation		Calculation Pan
Month	Day	Max. (°F)	Min. (°F)	Average (°F)	Average (%)	Average (°F)	(inch)	Max (mph)	Total (miles)	Average (mph)	Total (Langl)	ET_r Alfalfa (inch)	ET_o Grass (inch)	(Kp)
4	1	66.3	29.4	48.4	50.2	29.3		25.1	107.3	4.5	302.8	0.16	0.12	0.79
4	2	61.4	37.0	48.9	29.0	15.3		46.9	360.1	15.0	547.5	0.34	0.22	0.71
4	3	58.5	29.0	42.6	52.3	25.1		9.6	71.3	3.0	307.8	0.12	0.09	0.72
4	4	76.6	32.1	54.0	40.9	26.9		29.3	129.0	5.4	466.5	0.26	0.18	0.80
4	5	76.9	37.7	57.2	36.4	29.0		36.5	150.9	6.3	425.6	0.28	0.19	0.76
4	6	60.3	37.1	47.9	27.8	15.1		39.5	241.7	10.1	438.2	0.28	0.19	0.71
4	7	56.3	29.3	45.4	48.3	26.2	0.05	36.6	156.5	6.5	358.2	0.16	0.11	0.73
4	8	65.7	23.9	44.4	48.7	24.6	0.01	13.2	76.7	3.2	548.5	0.17	0.14	0.81
4	9	78.0	35.8	58.5	29.0	20.5		19.5	136.6	5.7	546.2	0.30	0.21	0.78
4	10	79.2	35.1	59.9	21.4	15.6		21.7	143.6	6.0	620.4	0.33	0.23	0.72
4	11	67.7	41.6	55.8	25.3	19.9		40.1	188.1	7.8	522.3	0.29	0.20	0.70
4	12	76.0	34.8	57.0	31.0	23.8		29.2	106.7	4.4	620.8	0.26	0.20	0.73
4	13	84.9	42.1	69.2	14.5	14.5		38.7	320.5	13.4	654.9	0.54	0.35	0.70
4	14	80.6	47.3	66.7	17.3	19.6		25.1	187.5	7.8	609.6	0.38	0.26	0.66
4	15	68.8	51.2	59.5	30.8	28.4		45.7	363.0	15.1	284.4	0.37	0.24	0.65
4	16	76.9	42.8	61.7	26.8	24.5		19.7	121.5	5.1	642.5	0.29	0.22	0.67
4	17	83.5	39.4	63.4	20.2	17.7		36.5	247.8	10.3	624.9	0.47	0.31	0.70
4	18	53.7	35.9	45.6	24.6	11.4		40.8	300.1	12.5	480.9	0.27	0.18	0.65
4	19	60.9	30.6	47.6	24.5	10.7		19.3	151.6	6.3	664.5	0.25	0.18	0.68
4	20	65.3	27.6	49.8	30.2	17.5		17.5	110.0	4.6	657.0	0.23	0.17	0.74
4	21	75.0	34.2	56.9	26.1	18.5		18.1	112.7	4.7	651.9	0.28	0.21	0.75
4	22	81.7	37.1	61.1	25.6	22.1		19.6	123.0	5.1	591.0	0.31	0.23	0.74
4	23	73.2	37.9	54.7	54.0	38.0		29.9	199.4	8.3	543.4	0.27	0.20	0.75
4	24	40.3	27.8	34.0	83.7	29.6	0.10	16.7	127.0	5.3	77.9	0.04	0.03	0.81
4	25	40.0	26.7	33.3	76.1	26.4	0.03	11.9	51.1	2.1	183.3	0.05	0.05	0.85
4	26	72.6	28.7	52.0	50.3	29.9		18.2	79.2	3.3	545.8	0.20	0.16	0.85
4	27	77.5	36.7	60.6	33.9	28.6		34.2	186.6	7.8	580.4	0.33	0.23	0.78
4	28	57.3	38.6	47.8	58.9	33.1	0.16	31.2	185.6	7.7	358.2	0.17	0.12	0.76
4	29	63.4	33.6	50.5	44.2	27.4		28.7	164.0	6.8	468.9	0.22	0.16	0.77

TABLE B4
NCWCD WEATHER STATION DATA
LONGMONT SOUTH
2006

Date		Temperature			Relative Humidity	Dew Point	Precipitation	Wind			Solar Radiation	ASCE Calculation		Calculation Pan
Month	Day	Max. (°F)	Min. (°F)	Average (°F)	Average (%)	Average (°F)	Total (inch)	Max (mph)	Total (miles)	Average (mph)	Total (Langl)	ET_r Alfalfa (inch)	ET_o Grass (inch)	(Kp)
4	30	69.3	39.7	52.9	56.3	37.2	0.07	27.0	114.9	4.8	436.3	0.19	0.15	0.79
5	1	74.9	38.2	57.0	47.4	33.7		19.2	140.5	5.9	658.2	0.28	0.21	0.80
5	2	77.3	43.4	61.4	31.7	30.0	0.01	37.3	223.5	9.3	539.8	0.36	0.25	0.74
5	3	56.9	43.8	48.6	62.2	36.0	0.09	18.8	131.3	5.5	292.2	0.14	0.11	0.75
5	4	53.4	40.2	46.0	80.8	40.3	0.11	16.9	134.8	5.6	215.8	0.09	0.07	0.81
5	5	47.5	38.5	42.4	89.0	39.3	0.01	15.6	129.3	5.4	140.7	0.05	0.05	0.83
5	6	69.8	38.9	54.0	60.2	38.2		15.1	82.6	3.4	580.1	0.20	0.16	0.83
5	7	72.1	41.4	58.7	44.0	34.8		35.7	142.1	5.9	604.9	0.26	0.20	0.80
5	8	72.3	45.5	57.7	49.0	38.0	0.01	39.7	173.1	7.2	357.5	0.25	0.17	0.77
5	9	65.6	33.4	50.4	58.5	33.8	0.17	28.4	192.8	8.0	392.6	0.21	0.15	0.77
5	10	62.1	32.8	46.6	52.3	26.7	0.06	39.0	156.2	6.5	478.1	0.21	0.16	0.78
5	11	67.4	28.5	51.1	44.2	26.8		16.1	101.4	4.2	470.2	0.20	0.15	0.79
5	12	80.4	34.8	60.8	37.3	31.4		16.0	111.8	4.7	429.1	0.26	0.19	0.80
5	13	77.9	43.1	64.4	37.5	36.0		26.7	142.1	5.9	489.7	0.27	0.20	0.78
5	14	71.2	45.4	58.7	42.7	35.4	0.01	14.0	92.3	3.8	480.3	0.21	0.17	0.78
5	15	71.7	37.1	56.7	40.4	31.1		17.8	90.8	3.8	592.8	0.23	0.18	0.80
5	16	78.5	39.3	61.5	35.1	31.8		16.4	94.9	4.0	638.9	0.27	0.21	0.79
5	17	79.7	44.5	62.9	43.7	39.2	0.01	40.9	113.6	4.7	562.1	0.27	0.21	0.79
5	18	84.3	50.6	68.7	37.3	39.4		36.5	108.1	4.5	585.1	0.30	0.23	0.78
5	19	85.6	52.0	70.5	35.2	40.2		30.7	132.4	5.5	545.2	0.32	0.24	0.77
5	20	83.7	55.2	71.0	38.6	43.3	0.01	20.2	109.7	4.6	522.0	0.28	0.22	0.77
5	21	87.3	51.9	71.4	36.4	40.0		28.0	124.6	5.2	650.1	0.34	0.26	0.77
5	22	81.1	50.2	62.7	56.5	46.3	0.10	42.2	117.7	4.9	374.2	0.24	0.17	0.78
5	23	75.7	45.5	63.5	46.5	39.2		34.1	227.0	9.5	658.8	0.33	0.25	0.77
5	24	81.6	48.4	67.6	36.0	38.1		30.2	102.5	4.3	649.9	0.29	0.23	0.76
5	25	84.3	49.3	68.2	39.9	41.6		17.9	106.7	4.4	627.4	0.30	0.23	0.78
5	26	84.4	50.3	68.5	43.4	43.8		24.3	109.0	4.5	438.5	0.26	0.20	0.79
5	27	89.2	49.9	73.3	24.4	31.1		23.7	150.7	6.3	661.4	0.40	0.29	0.75
5	28	83.6	52.4	68.3	23.9	29.5		38.0	219.6	9.2	478.6	0.43	0.29	0.70

TABLE B4
NCWCD WEATHER STATION DATA
LONGMONT SOUTH
2006

Date		Temperature			Relative Humidity	Dew Point	Precipitation	Wind			Solar Radiation	ASCE Calculation		Calculation Pan
Month	Day	Max. (°F)	Min. (°F)	Average (°F)	Average (%)	Average (°F)	Total (inch)	Max (mph)	Total (miles)	Average (mph)	Total (Langl)	ET_r Alfalfa (inch)	ET_o Grass (inch)	(Kp)
5	29	72.2	43.3	59.5	40.5	33.4	0.03	22.2	148.4	6.2	566.5	0.27	0.20	0.72
5	30	71.4	44.0	57.7	61.9	43.5		15.7	84.8	3.5	463.2	0.18	0.15	0.80
5	31	74.6	48.8	59.6	67.8	48.2	0.01	27.8	121.8	5.1	459.8	0.21	0.16	0.83
6	1	79.8	46.0	64.6	57.4	46.9		18.8	102.9	4.3	672.1	0.26	0.22	0.82
6	2	89.0	47.9	70.9	40.8	42.4		13.4	80.1	3.3	690.0	0.30	0.24	0.82
6	3	88.9	52.5	74.8	25.0	34.1		24.6	146.5	6.1	489.3	0.36	0.25	0.76
6	4	88.0	55.7	72.9	39.3	45.8		17.5	119.1	5.0	708.2	0.34	0.27	0.75
6	5	93.6	56.4	76.3	33.8	42.7		17.0	112.9	4.7	681.5	0.37	0.28	0.77
6	6	94.0	57.1	76.4	33.6	42.9		15.3	105.8	4.4	696.3	0.36	0.28	0.76
6	7	95.3	56.3	77.6	31.8	42.7		28.0	132.0	5.5	590.3	0.38	0.28	0.75
6	8	92.9	63.9	77.3	30.8	43.2		34.2	136.3	5.7	529.2	0.38	0.28	0.74
6	9	88.3	58.8	73.2	35.7	42.3		30.5	118.4	4.9	620.9	0.34	0.26	0.74
6	10	87.0	57.0	71.6	43.4	46.4		24.5	165.1	6.9	626.3	0.37	0.28	0.75
6	11	90.8	51.0	70.9	45.9	45.6		22.6	118.5	4.9	643.9	0.34	0.26	0.77
6	12	92.5	55.5	73.4	45.8	48.6	0.03	29.7	137.3	5.7	668.3	0.38	0.28	0.78
6	13	95.4	58.4	78.4	40.8	48.8		34.3	126.2	5.3	652.7	0.38	0.29	0.77
6	14	97.8	59.1	80.6	23.5	35.6		30.2	195.1	8.1	718.6	0.53	0.37	0.73
6	15	80.5	55.3	70.3	27.5	34.3		26.6	176.5	7.4	561.8	0.36	0.26	0.70
6	16	72.0	52.1	61.6	56.3	45.2	0.07	30.8	151.2	6.3	343.8	0.21	0.16	0.75
6	17	84.7	50.2	69.6	35.1	37.8		22.0	116.4	4.8	696.2	0.33	0.26	0.77
6	18	89.5	54.5	75.1	29.7	38.9	0.02	26.7	111.1	4.6	589.9	0.33	0.25	0.76
6	19	92.7	53.1	72.2	42.5	46.3		44.9	125.0	5.2	554.0	0.35	0.26	0.77
6	20	88.8	55.2	74.5	32.6	41.2		29.9	141.9	5.9	536.4	0.35	0.26	0.76
6	21	76.0	55.4	66.7	55.0	50.0	0.10	17.1	118.0	4.9	529.5	0.23	0.19	0.78
6	22	71.3	55.1	63.5	68.9	52.9		25.9	146.3	6.1	451.7	0.19	0.16	0.81
6	23	88.2	49.2	70.5	44.2	43.2		16.4	101.1	4.2	733.5	0.33	0.26	0.80
6	24	80.7	55.0	67.4	52.9	49.0	0.05	27.0	146.0	6.1	590.9	0.29	0.23	0.79
6	25	74.5	52.3	64.0	61.4	49.6		16.4	99.4	4.1	530.3	0.21	0.18	0.81
6	26	78.6	49.9	65.3	46.0	42.2		23.2	101.9	4.2	711.6	0.28	0.23	0.81

TABLE B4
NCWCD WEATHER STATION DATA
LONGMONT SOUTH
2006

Date		Temperature			Relative Humidity	Dew Point	Precipitation Total	Wind			Solar Radiation	ASCE Calculation		Calculation Pan
Month	Day	Max. (°F)	Min. (°F)	Average (°F)	Average (%)	Average (°F)	(inch)	Max (mph)	Total (miles)	Average (mph)	Total (Langl)	ET_r Alfalfa (inch)	ET_o Grass (inch)	(Kp)
6	27	84.3	49.2	69.9	37.9	41.5		16.1	88.2	3.7	661.4	0.28	0.23	0.80
6	28	85.4	53.4	70.2	39.7	43.2		34.3	127.0	5.3	509.6	0.30	0.23	0.78
6	29	90.9	52.3	74.4	35.6	43.3		12.9	82.4	3.4	685.2	0.31	0.25	0.78
6	30	88.1	55.8	74.9	37.0	45.9		26.4	116.4	4.8	560.1	0.31	0.24	0.78
7	1	83.2	55.5	69.7	57.6	53.3	0.02	23.2	108.0	4.5	471.7	0.24	0.19	0.80
7	2	84.8	56.9	69.4	64.9	56.3		21.1	113.2	4.7	506.5	0.25	0.20	0.82
7	3	81.3	59.5	68.2	68.2	56.8		26.0	106.8	4.5	443.9	0.22	0.17	0.82
7	4	85.9	53.0	68.2	68.2	55.6	0.62	28.9	86.3	3.6	598.6	0.25	0.21	0.83
7	5	80.8	56.0	67.7	73.3	58.2	0.06	21.0	108.3	4.5	581.6	0.23	0.19	0.84
7	6	79.4	58.9	68.9	73.3	59.5		16.7	96.3	4.0	438.5	0.19	0.16	0.84
7	7	84.7	57.1	71.3	62.5	56.3	0.08	27.2	143.5	6.0	425.6	0.25	0.19	0.83
7	8	70.8	61.9	64.6	85.3	60.1	0.23	13.1	92.0	3.8	125.1	0.09	0.07	0.83
7	9	62.6	56.1	58.8	91.8	56.4	0.93	17.2	121.5	5.1	114.7	0.06	0.05	0.85
7	10	83.1	52.9	67.9	69.8	56.5	0.02	16.1	69.6	2.9	618.7	0.23	0.20	0.85
7	11	87.7	56.0	71.8	52.1	51.1		28.6	117.3	4.9	571.5	0.30	0.23	0.83
7	12	90.1	54.2	74.2	48.5	51.1		17.7	86.3	3.6	663.6	0.29	0.24	0.81
7	13	92.6	58.8	78.0	36.4	47.2		18.7	104.2	4.3	698.8	0.34	0.27	0.80
7	14	98.0	57.5	79.7	32.6	44.6		16.4	104.8	4.4	703.0	0.38	0.29	0.77
7	15	100.9	60.2	82.3	33.4	46.1		15.0	106.2	4.4	693.1	0.39	0.30	0.76
7	16	102.9	60.3	83.4	30.5	45.6		25.4	109.9	4.6	657.2	0.40	0.30	0.76
7	17	90.3	68.7	79.0	32.5	46.6		29.2	199.3	8.3	524.9	0.43	0.30	0.73
7	18	96.9	59.7	78.1	40.0	49.8		17.7	106.5	4.4	568.5	0.34	0.26	0.74
7	19	97.5	61.5	80.1	35.6	48.2		26.2	119.1	5.0	498.7	0.35	0.26	0.77
7	20	87.8	64.1	73.1	62.7	59.3	0.04	37.7	117.0	4.9	455.4	0.26	0.20	0.79
7	21	86.9	63.3	74.6	57.7	56.8		16.9	96.0	4.0	621.0	0.28	0.23	0.81
7	22	87.2	58.3	74.1	48.7	51.9		17.8	83.7	3.5	685.0	0.28	0.24	0.81
7	23	94.0	59.7	77.5	44.8	51.8		19.6	94.8	4.0	549.4	0.30	0.23	0.80
7	24	94.5	65.2	78.2	45.3	53.4		35.4	105.6	4.4	494.9	0.31	0.23	0.79
7	25	89.1	60.7	73.2	56.3	55.0	0.21	28.9	125.8	5.2	418.2	0.28	0.21	0.79

TABLE B4
NCWCD WEATHER STATION DATA
LONGMONT SOUTH
2006

Date		Temperature			Relative Humidity	Dew Point	Precipitation	Wind			Solar Radiation	ASCE Calculation		Calculation Pan
Month	Day	Max. (°F)	Min. (°F)	Average (°F)	Average (%)	Average (°F)	Total (inch)	Max (mph)	Total (miles)	Average (mph)	Total (Langl)	ET_r Alfalfa (inch)	ET_o Grass (inch)	(Kp)
7	26	87.0	57.9	72.8	60.0	56.5		22.9	134.0	5.6	507.3	0.27	0.21	0.80
7	27	92.1	62.1	76.3	49.1	53.3	0.04	23.6	103.8	4.3	645.9	0.32	0.25	0.80
7	28	95.7	58.4	77.5	41.5	49.8		17.3	86.3	3.6	651.5	0.32	0.25	0.79
7	29	92.9	58.6	76.9	43.1	50.9		11.3	85.1	3.5	656.5	0.30	0.25	0.80
7	30	94.3	58.3	78.7	38.4	50.4		14.0	83.4	3.5	588.3	0.29	0.23	0.80
7	31	89.4	63.1	76.3	38.8	48.0		24.4	156.9	6.5	517.9	0.36	0.26	0.77
8	1	82.8	61.5	70.0	62.3	55.7		18.4	111.5	4.6	504.7	0.25	0.19	0.78
8	2	82.1	57.6	68.5	63.3	54.3	0.02	21.6	103.8	4.3	608.3	0.25	0.21	0.81
8	3	78.4	52.8	66.8	63.4	53.4		25.8	154.7	6.4	394.0	0.21	0.16	0.81
8	4	88.9	53.0	72.5	52.6	51.9		23.3	98.8	4.1	532.5	0.26	0.21	0.81
8	5	79.5	62.0	70.4	56.6	54.1	0.01	13.4	85.8	3.6	190.4	0.15	0.11	0.82
8	6	82.5	64.3	72.3	53.3	53.9		15.9	106.4	4.4	427.5	0.23	0.18	0.81
8	7	82.7	58.5	70.7	63.6	57.1		16.1	96.9	4.0	506.2	0.22	0.18	0.81
8	8	90.7	61.0	75.6	56.8	56.3		13.7	82.1	3.4	575.2	0.26	0.22	0.83
8	9	91.8	62.2	78.7	37.2	48.0		21.1	95.6	4.0	543.6	0.29	0.23	0.80
8	10	90.3	61.4	78.0	33.3	46.0		19.7	113.6	4.7	432.5	0.29	0.21	0.77
8	11	92.2	56.0	74.9	43.1	49.7		24.8	124.2	5.2	562.0	0.32	0.24	0.77
8	12	81.3	62.9	72.1	52.9	53.6		33.6	145.1	6.0	396.1	0.25	0.19	0.78
8	13	84.2	56.8	68.0	65.0	54.2	0.28	27.3	108.1	4.5	542.6	0.25	0.20	0.80
8	14	78.0	58.1	67.7	74.1	58.9		17.3	98.2	4.1	504.1	0.19	0.16	0.83
8	15	85.9	55.0	70.4	64.1	56.1		19.0	98.0	4.1	530.3	0.23	0.19	0.84
8	16	84.4	60.4	70.6	58.2	54.2		17.9	108.7	4.5	508.3	0.25	0.20	0.82
8	17	91.3	55.3	72.4	52.9	52.3		21.0	91.6	3.8	583.5	0.28	0.22	0.81
8	18	73.8	58.2	65.3	71.8	55.8	0.05	14.1	88.7	3.7	252.5	0.13	0.10	0.83
8	19	76.3	59.5	64.6	80.8	58.3	0.07	16.9	78.4	3.3	331.8	0.14	0.12	0.85
8	20	83.7	53.0	67.8	65.6	54.4		22.6	91.5	3.8	557.8	0.23	0.19	0.84
8	21	82.9	54.5	70.1	57.4	53.0		17.5	106.8	4.5	485.4	0.23	0.18	0.83
8	22	92.0	53.6	72.0	53.3	52.0		18.1	78.7	3.3	554.0	0.26	0.20	0.82
8	23	91.7	55.3	76.0	38.2	46.7		17.1	81.4	3.4	573.0	0.27	0.21	0.81

TABLE B4
NCWCD WEATHER STATION DATA
LONGMONT SOUTH
2006

Date		Temperature			Relative Humidity	Dew Point	Precipitation Total	Wind			Solar Radiation	ASCE Calculation		Calculation Pan
Month	Day	Max. (°F)	Min. (°F)	Average (°F)	Average (%)	Average (°F)	(inch)	Max (mph)	Total (miles)	Average (mph)	Total (Langl)	ET_r Alfalfa (inch)	ET_o Grass (inch)	(Kp)
8	24	89.5	63.7	75.2	41.7	49.4		29.3	123.8	5.2	445.2	0.30	0.22	0.78
8	25	75.6	57.6	66.4	62.8	53.4		20.1	159.5	6.6	439.1	0.21	0.17	0.78
8	26	69.6	53.3	59.0	78.5	52.2	0.05	18.6	112.8	4.7	282.1	0.13	0.10	0.81
8	27	70.4	47.8	58.8	70.5	48.7	0.14	14.7	87.4	3.6	402.9	0.15	0.12	0.84
8	28	75.0	43.8	58.7	68.7	47.4	0.05	19.5	80.0	3.3	441.2	0.17	0.14	0.85
8	29	81.4	45.5	63.1	59.3	46.5		11.5	64.8	2.7	580.2	0.21	0.17	0.85
8	30	91.1	47.7	70.6	42.7	43.3		14.8	82.3	3.4	541.8	0.26	0.20	0.82
8	31	82.3	53.5	66.1	50.8	46.6	0.01	24.1	100.7	4.2	364.9	0.22	0.16	0.80
9	1	74.7	45.9	56.6	76.2	48.8	0.02	29.5	125.1	5.2	436.3	0.19	0.14	0.81
9	2	63.3	42.9	51.6	78.2	44.7		9.9	56.2	2.3	289.7	0.10	0.08	0.85
9	3	73.3	38.6	57.2	55.5	39.0		19.9	75.8	3.2	574.2	0.19	0.16	0.85
9	4	70.3	40.9	56.3	69.0	46.4		13.3	86.2	3.6	554.2	0.17	0.14	0.85
9	5	80.1	44.4	62.5	57.6	45.2		11.9	62.6	2.6	524.5	0.19	0.16	0.85
9	6	78.8	47.9	63.5	51.3	44.3		13.2	69.9	2.9	415.6	0.18	0.14	0.83
9	7	79.8	48.1	62.4	53.6	44.5		21.6	110.2	4.6	347.2	0.21	0.15	0.82
9	8	63.3	50.9	57.2	78.4	50.5	0.10	17.5	77.4	3.2	151.6	0.08	0.06	0.83
9	9	70.9	50.8	58.0	81.1	51.8	0.04	15.1	58.9	2.5	374.7	0.12	0.11	0.86
9	10	70.1	46.5	56.3	82.6	50.8		18.3	71.8	3.0	326.7	0.12	0.10	0.87
9	11	71.1	46.6	56.4	83.7	51.1	0.28	26.4	92.6	3.9	285.4	0.12	0.10	0.86
9	12	77.7	41.7	59.3	65.5	45.6	0.01	10.2	61.2	2.5	528.4	0.17	0.14	0.86
9	13	85.1	43.8	64.3	52.1	42.4		13.1	69.8	2.9	489.2	0.21	0.16	0.84
9	14	84.2	47.1	66.9	45.8	43.1		18.7	104.2	4.3	458.3	0.24	0.17	0.81
9	15	79.0	44.9	62.5	56.1	44.6	0.09	36.3	135.9	5.7	392.5	0.22	0.16	0.80
9	16	65.2	42.0	51.7	54.9	35.3	0.05	46.3	314.7	13.1	308.6	0.25	0.16	0.75
9	17	62.7	33.2	50.6	34.2	22.7		30.3	181.9	7.6	527.7	0.23	0.16	0.72
9	18	65.1	35.1	51.7	43.5	29.2		22.8	97.0	4.0	424.0	0.16	0.12	0.77
9	19	76.3	34.5	56.9	46.6	33.2		15.3	85.3	3.6	521.8	0.20	0.15	0.81
9	20	75.8	37.4	57.9	48.5	36.6	0.02	25.9	130.5	5.4	393.7	0.22	0.15	0.81
9	21	62.3	46.0	53.6	60.8	40.1	0.05	34.0	181.3	7.6	167.2	0.15	0.10	0.79

TABLE B4
NCWCD WEATHER STATION DATA
LONGMONT SOUTH
2006

Date		Temperature			Relative Humidity	Dew Point	Precipitation Total	Wind			Solar Radiation	ASCE Calculation		Calculation Pan
Month	Day	Max. (°F)	Min. (°F)	Average (°F)	Average (%)	Average (°F)	(inch)	Max (mph)	Total (miles)	Average (mph)	Total (Langl)	ET_r Alfalfa (inch)	ET_o Grass (inch)	(Kp)
9	22	54.7	34.0	46.0	68.2	35.7		13.3	86.5	3.6	208.2	0.08	0.06	0.81
9	23	57.0	34.4	46.3	62.8	33.2		25.5	160.4	6.7	277.8	0.13	0.09	0.82
9	24	66.3	33.6	50.3	54.1	31.7		13.6	86.2	3.6	498.8	0.16	0.12	0.81
9	25	69.3	35.6	52.9	45.8	30.3		13.4	74.5	3.1	491.1	0.16	0.13	0.82
9	26	79.0	36.4	59.1	37.7	28.8		20.4	127.4	5.3	493.3	0.26	0.18	0.79
9	27	67.6	40.2	53.5	51.2	35.3		22.8	111.3	4.6	264.3	0.16	0.11	0.79
9	28	78.6	34.5	57.2	48.0	34.0		20.8	98.2	4.1	474.5	0.21	0.15	0.81
9	29	81.6	45.1	65.7	30.7	31.7		19.5	124.9	5.2	466.4	0.26	0.18	0.78
9	30	82.7	42.0	63.4	33.6	30.6		16.4	94.5	3.9	469.8	0.23	0.16	0.76
10	1	84.0	43.5	67.2	23.8	26.5		23.4	144.4	6.0	381.5	0.29	0.19	0.75
10	2	81.3	49.3	65.0	32.3	33.5		17.7	104.8	4.4	229.8	0.22	0.14	0.74
10	3	76.9	44.0	60.5	46.5	38.2		35.1	192.9	8.0	212.5	0.25	0.16	0.75
10	4	63.8	43.0	52.0	65.7	40.6		17.5	70.1	2.9	349.7	0.11	0.09	0.80
10	5	78.6	42.6	60.3	53.6	41.6		15.4	68.8	2.9	352.4	0.15	0.11	0.84
10	6	77.1	48.8	63.4	54.0	45.2		13.2	98.8	4.1	321.1	0.17	0.12	0.82
10	7	79.9	49.2	64.9	46.3	41.6		18.9	107.7	4.5	407.9	0.20	0.14	0.80
10	8	57.1	39.9	48.4	73.6	40.1	0.08	19.6	124.1	5.2	104.2	0.08	0.06	0.81
10	9	41.1	37.1	39.1	93.9	37.5	0.65	11.0	125.7	5.2	72.9	0.03	0.02	0.84
10	10	49.7	34.4	40.3	86.6	36.5	0.14	12.2	79.5	3.3	194.7	0.06	0.05	0.85
10	11	65.1	34.7	48.0	66.2	36.1		26.5	145.1	6.0	360.0	0.15	0.11	0.84
10	12	63.0	36.7	46.5	64.6	33.9		13.8	80.6	3.4	383.0	0.12	0.09	0.82
10	13	64.8	32.1	47.9	63.7	34.8		13.9	65.6	2.7	394.4	0.11	0.09	0.84
10	14	58.5	35.3	48.3	68.7	38.1	0.01	20.8	80.2	3.3	203.3	0.08	0.06	0.85
10	15	69.8	40.1	54.5	59.2	38.9		10.6	71.8	3.0	395.3	0.13	0.10	0.85
10	16	68.6	37.5	53.2	54.4	35.7		28.5	147.6	6.2	303.6	0.17	0.12	0.81
10	17	54.9	25.9	35.7	85.9	31.6	0.23	15.6	151.3	6.3	64.5	0.09	0.06	0.81
10	18	45.2	23.2	32.1	78.5	25.7	0.10	12.7	79.0	3.3	379.3	0.07	0.05	0.84
10	19	55.7	25.8	41.6	59.7	26.9		34.8	224.6	9.4	344.6	0.15	0.10	0.81
10	20	62.6	32.8	48.2	56.7	32.4	0.13	38.0	220.4	9.2	346.7	0.18	0.12	0.77

TABLE B4
NCWCD WEATHER STATION DATA
LONGMONT SOUTH
2006

Date		Temperature			Relative Humidity	Dew Point	Precipitation Total	Wind			Solar Radiation	ASCE Calculation		Calculation Pan
Month	Day	Max. (°F)	Min. (°F)	Average (°F)	Average (%)	Average (°F)	(inch)	Max (mph)	Total (miles)	Average (mph)	Total (Langl)	ET_r Alfalfa (inch)	ET_o Grass (inch)	(Kp)
10	21	47.2	28.3	36.7	71.5	28.0	0.03	20.8	125.4	5.2	283.1	0.08	0.06	0.80
10	22	49.5	24.3	37.1	64.7	25.2		12.5	96.8	4.0	372.2	0.09	0.06	0.83
10	23	65.7	26.1	43.6	57.3	28.1		8.9	69.2	2.9	369.4	0.12	0.08	0.84
10	24	63.9	31.2	46.4	50.8	27.5		11.0	74.3	3.1	300.5	0.11	0.08	0.83
10	25	65.6	35.6	48.8	56.5	32.6		27.0	136.0	5.7	221.7	0.15	0.10	0.81
10	26	41.5	25.9	34.5	85.3	30.5	1.05	24.8	117.5	4.9	102.8	0.04	0.03	0.82
10	27	58.9	24.5	41.3	58.7	27.5		23.0	133.1	5.5	330.4	0.12	0.08	0.83
10	28	71.3	34.8	54.2	33.8	25.1		25.1	130.8	5.5	353.9	0.19	0.12	0.79
10	29	74.2	41.3	56.7	30.8	25.9		23.6	119.7	5.0	271.0	0.20	0.13	0.75
10	30	65.2	25.9	45.1	41.8	22.2	0.01	29.1	140.3	5.8	336.1	0.17	0.11	0.76
10	31	37.0	23.9	28.8	65.3	18.8		11.3	59.4	2.5	267.5	0.05	0.04	0.81
11	1	38.0	19.2	27.8	63.4	16.3		13.6	63.5	2.6	332.4			
11	2	52.8	21.9	34.5	60.6	21.3		8.3	59.5	2.5	231.4			
11	3	66.4	30.7	45.4	52.0	26.5		24.2	96.3	4.0	240.6			
11	4	58.0	34.2	44.7	58.9	30.8		12.6	77.3	3.2	144.7			
11	5	64.9	30.7	48.4	46.2	26.3		27.0	146.5	6.1	301.9			
11	6	66.0	38.1	52.7	42.8	30.2		25.4	188.5	7.9	276.8			
11	7	73.4	37.4	58.1	43.6	33.6		33.8	262.3	10.9	262.7			
11	8	78.9	42.8	64.4	26.4	27.0		39.5	193.2	8.1	311.3			
11	9	45.3	36.7	42.0	75.8	34.9	0.02	15.2	93.0	3.9	72.7			
11	10	51.6	22.4	38.5	55.3	21.8	0.01	25.9	155.2	6.5	305.3			
11	11	49.7	21.0	34.0	70.2	24.7		10.1	60.3	2.5	221.0			
11	12	42.6	24.6	35.9	70.9	27.4	0.06	15.4	114.3	4.8	104.6			
11	13	50.0	19.8	33.4	59.2	19.8		35.5	175.8	7.3	150.0			
11	14	54.1	31.3	40.9	49.3	23.0	0.01	38.4	246.0	10.3	215.0			
11	15	47.1	24.4	33.9	52.6	17.0		14.8	105.6	4.4	279.1			
11	16	67.3	22.0	43.6	44.3	19.9		40.1	210.2	8.8	213.9			
11	17	54.7	28.8	42.0	52.8	25.4		17.5	124.2	5.2	243.2			
11	18	55.4	25.4	39.3	60.4	25.7		13.8	77.0	3.2	260.6			

TABLE B4
NCWCD WEATHER STATION DATA
LONGMONT SOUTH
2006

Date		Temperature			Relative Humidity	Dew Point	Precipitation Total	Wind			Solar Radiation	ASCE Calculation		Calculation Pan
Month	Day	Max. (°F)	Min. (°F)	Average (°F)	Average (%)	Average (°F)	(inch)	Max (mph)	Total (miles)	Average (mph)	Total (Langl)	ET_r Alfalfa (inch)	ET_o Grass (inch)	(Kp)
11	19	53.9	20.6	37.6	55.1	21.6		12.9	76.4	3.2	270.9			
11	20	62.0	24.0	40.0	51.8	21.0		25.6	85.9	3.6	87.3			
11	21	70.4	35.1	55.3	22.2	16.5		22.9	105.8	4.4	241.1			
11	22	72.7	37.9	57.6	25.5	20.7		29.2	207.4	8.6	276.8			
11	23	64.9	30.0	46.7	43.2	23.7	0.01	27.5	108.9	4.5	177.2			
11	24	46.7	26.3	35.2	43.2	14.1		17.5	107.5	4.5	185.8			
11	25	59.5	23.2	39.5	46.4	18.6		10.7	76.4	3.2	252.2			
11	26	48.3	18.5	33.3	60.4	20.1		16.6	93.0	3.9	217.9			
11	27	32.3	12.3	21.3	87.5	18.4		11.0	50.9	2.1	183.9			
11	28	41.8	21.0	31.0	67.8	20.5	0.20	16.8	120.8	5.0	169.1			
11	29	21.9	-0.7	14.8	90.6	13.5	0.19	13.2	76.8	3.2	160.2			
11	30	34.6	-6.7	9.4	86.3	8.2		31.7	59.1	2.5	262.1			
12	1	35.4	16.6	25.4	69.4	16.6		16.8	88.7	3.7	194.3			
12	2	26.5	5.1	17.9	83.0	14.1	0.03	10.2	61.1	2.5	207.7			
12	3	28.9	-2.3	10.5	74.7	4.2		10.4	63.1	2.6	262.5			
12	4	49.2	7.1	27.3	56.8	14.0		12.8	85.5	3.6	251.5			
12	5	52.4	19.2	37.7	45.6	17.3		34.5	214.2	8.9	184.5			
12	6	40.0	19.3	30.5	70.5	21.9		10.2	68.7	2.9	224.9			
12	7	39.1	18.9	28.7	76.0	21.9		9.6	44.9	1.9	239.8			
12	8	58.3	22.7	36.3	64.2	24.6		6.9	55.3	2.3	242.5			
12	9	57.7	24.0	39.6	49.0	20.7		20.1	88.7	3.7	239.7			
12	10	49.1	25.0	37.1	57.9	23.4		12.1	111.3	4.6	236.0			
12	11	47.2	32.5	39.3	56.7	25.0		23.5	139.8	5.8	171.5			
12	12	47.2	31.6	41.3	38.6	17.8		33.9	258.7	10.8	82.5			
12	13	58.1	28.8	48.2	35.4	21.3		39.5	280.5	11.7	199.5			
12	14	61.1	39.8	51.8	36.7	25.8		40.7	246.4	10.3	120.8			
12	15	70.5	38.4	53.9	29.3	20.1		30.5	150.4	6.3	155.5			
12	16	55.5	26.3	37.1	44.5	17.0		19.1	126.4	5.3	208.7			
12	17	30.7	23.2	27.3	62.5	16.0	0.01	18.8	151.3	6.3	117.1			

TABLE B4
NCWCD WEATHER STATION DATA
LONGMONT SOUTH
2006

Date		Temperature			Relative Humidity	Dew Point	Precipitation Total	Wind			Solar Radiation	ASCE Calculation		Calculation Pan
Month	Day	Max. (°F)	Min. (°F)	Average (°F)	Average (%)	Average (°F)	(inch)	Max (mph)	Total (miles)	Average (mph)	Total (Langl)	ET_r Alfalfa (inch)	ET_o Grass (inch)	(Kp)
12	18	34.6	16.9	23.6	71.8	15.4		9.8	52.4	2.2	152.6			
12	19	37.1	15.3	25.6	73.3	17.9		9.9	65.7	2.7	216.7			
12	20	33.6	25.1	26.9	89.1	24.0	0.38	28.9	68.4	2.9	44.3			
12	21	37.0	10.5	25.4	83.8	21.3	0.11	13.6	109.2	4.5	148.9			
12	22	35.7	4.0	19.0	78.7	13.4		6.6	47.5	2.0	230.6			
12	23	39.0	8.4	20.3	76.4	13.8		12.5	84.1	3.5	244.8			
12	24	43.0	14.4	26.7	72.7	18.8		34.8	158.6	6.6	164.8			
12	25	37.0	0.0	17.3	69.8	9.3		13.5	68.1	2.8	224.5			
12	26	49.8	23.9	32.8	60.4	20.1		38.5	127.6	5.3	177.4			
12	27	49.0	19.1	32.2	66.5	21.9		11.8	76.1	3.2	179.7			
12	28	37.2	17.8	30.0	86.0	26.6	0.29	22.7	119.7	5.0	69.6			
12	29	27.1	22.2	24.3	88.1	21.3	0.02	18.8	94.9	4.0	79.1			
12	30	27.7	2.6	17.7	87.4	15.0	0.23	9.2	66.1	2.8	228.1			
12	31	41.4	5.7	21.1	65.6	10.9		12.6	86.7	3.6	274.5			
12	29	31.1	-1.6	21.4	43.4	2.5		40.1	241.0	10.0	227.2			
12	30	41.0	18.5	29.8	46.9	12.1		27.7	184.2	7.7	211.1			
12	31	32.5	9.7	21.5	33.1	-3.3		29.9	226.0	9.4	233.0			
							10.47						**41.48**	

TABLE B5
NCWCD WEATHER STATION DATA
LONGMONT SOUTH
2005

Date		Temperature			Relative Humidity	Dew Point	Precipitation Total	Wind			Solar Radiation	ASCE Calculation		Calculation Pan
Month	Day	Max. (°F)	Min. (°F)	Average (°F)	Average (%)	Average (°F)	(inch)	Max (mph)	Total (miles)	Average (mph)	Total (Langl)	ET_r Alfalfa (inch)	ET_o Grass (inch)	(Kp)
1	1	45.5	20.6	30.8	69.2	21.4		12.5	75.8	3.2	229.4			
1	2	35.7	17.8	27.0	76.4	20.5		11.3	53.2	2.2	148.2			
1	3	32.0	20.4	24.6	91.1	22.4		6.4	39.2	1.6	94.7			
1	4	25.4	6.7	17.7	90.0	16.2	0.05	15.7	61.1	2.5	32.2			
1	5	13.2	1.0	4.8	83.5	1.0	0.08	12.1	26.1	1.1	148.8			
1	6	32.4	-1.4	14.4	79.0	10.1		14.0	53.1	2.2	241.3			
1	7	29.1	7.6	18.6	65.5	8.8		14.3	95.0	4.0	242.2			
1	8	53.1	7.1	34.0	53.9	17.6		33.6	143.0	6.0	163.7			
1	9	60.3	28.7	46.4	47.2	25.3		44.3	283.6	11.8	234.3			
1	10	45.3	23.8	33.8	83.3	29.2		13.0	72.6	3.0	158.5			
1	11	38.2	30.6	33.7	91.4	31.5		9.3	47.3	2.0	58.2			
1	12	37.1	20.0	30.1	82.1	25.4	0.10	15.8	104.4	4.3	198.9			
1	13	41.5	11.3	24.6	65.5	13.2		41.6	168.0	7.0	254.3			
1	14	21.4	8.7	13.9	86.6	10.8		13.4	63.5	2.6	215.8			
1	15	28.8	11.0	16.3	83.5	12.2		12.1	57.8	2.4	206.8			
1	16	32.3	11.1	20.8	69.6	12.6		11.0	46.9	2.0	204.2			
1	17	46.7	19.0	31.2	67.6	21.0		9.3	61.1	2.5	229.5			
1	18	64.9	23.2	43.0	53.0	24.7		21.9	142.6	5.9	154.0			
1	19	68.0	32.7	46.8	52.3	28.8		19.4	93.5	3.9	243.0			
1	20	73.9	27.6	49.2	42.3	24.1		16.4	95.7	4.0	267.8			
1	21	64.8	31.1	48.0	41.1	23.1		24.8	142.4	5.9	218.2			
1	22	43.3	24.4	33.9	72.2	25.7	0.01	12.6	91.1	3.8	245.9			
1	23	65.5	23.0	40.0	59.3	24.3		11.2	75.9	3.2	261.6			
1	24	59.2	29.7	43.8	42.4	21.2		9.9	81.8	3.4	276.5			
1	25	62.1	31.5	44.7	39.5	19.3	0.01	16.8	76.2	3.2	286.7			
1	26	48.6	24.3	36.6	60.5	23.9		9.4	71.0	3.0	238.2			
1	27	47.5	25.6	35.7	71.8	27.2		9.3	56.1	2.3	208.7			
1	28	51.5	30.6	38.3	76.9	31.0		11.8	67.4	2.8	179.3			
1	29	46.6	27.4	37.6	77.1	31.0	0.17	15.1	77.1	3.2	122.6			

TABLE B5
NCWCD WEATHER STATION DATA
LONGMONT SOUTH
2005

Date		Temperature			Relative Humidity	Dew Point	Precipitation Total	Wind			Solar Radiation	ASCE Calculation		Calculation Pan
Month	Day	Max. (°F)	Min. (°F)	Average (°F)	Average (%)	Average (°F)	(inch)	Max (mph)	Total (miles)	Average (mph)	Total (Langl)	ET_r Alfalfa (inch)	ET_o Grass (inch)	(Kp)
1	30	35.9	31.1	33.2	92.9	31.4	0.37	19.0	30.4	1.3	78.9			
1	31	47.3	21.5	31.9	73.9	23.9	0.06	19.2	74.7	3.1	280.0			
2	1	46.1	16.9	30.4	65.1	19.2		19.0	88.0	3.7	317.3			
2	2	52.0	21.8	34.4	55.1	19.0	0.01	12.3	84.2	3.5	311.4			
2	3	57.1	29.1	42.0	53.0	24.2		9.8	76.3	3.2	308.5			
2	4	60.3	26.9	42.2	55.5	25.2		9.3	63.6	2.6	315.9			
2	5	60.2	28.5	42.6	41.6	18.4		18.3	104.7	4.4	256.8			
2	6	40.9	26.8	30.1	73.6	22.5	0.01	12.3	60.7	2.5	82.8			
2	7	32.4	25.3	28.5	79.7	23.0	0.01	12.4	84.3	3.5	96.6			
2	8	34.1	21.4	28.0	79.8	22.4	0.02	10.5	55.9	2.3	151.7			
2	9	47.0	17.6	31.0	53.1	12.7		13.6	80.3	3.3	338.9			
2	10	53.8	15.1	33.4	47.6	12.8		12.5	77.8	3.2	340.3			
2	11	56.1	22.4	39.1	40.1	13.8		8.8	64.0	2.7	296.6			
2	12	58.9	33.6	46.4	40.2	21.8		26.4	91.7	3.8	212.7			
2	13	59.1	35.8	47.7	32.6	18.1		40.3	290.4	12.1	347.0			
2	14	63.4	27.2	44.1	42.4	20.1		37.2	164.4	6.8	356.0			
2	15	32.7	25.2	28.2	87.5	25.1	0.18	14.5	95.9	4.0	139.0			
2	16	32.4	17.3	26.2	74.6	19.2		13.1	93.0	3.9	219.2			
2	17	47.3	11.5	28.5	59.3	14.4		12.5	74.7	3.1	375.6			
2	18	40.4	18.6	30.1	60.6	17.4		10.6	63.1	2.6	293.3			
2	19	57.8	22.3	39.6	57.1	23.5		39.1	158.4	6.6	310.2			
2	20	58.3	29.1	44.1	42.4	21.5		28.7	122.1	5.1	336.6			
2	21	57.0	33.0	46.7	30.8	16.3		38.4	202.8	8.4	285.2			
2	22	45.0	26.9	35.7	65.4	24.9		10.9	77.4	3.2	161.8			
2	23	47.1	25.3	34.6	63.2	22.1		13.1	61.1	2.5	250.5			
2	24	51.6	20.6	35.5	46.8	14.4		14.3	74.9	3.1	398.4			
2	25	55.1	21.9	38.7	39.2	13.2		16.5	88.8	3.7	402.6			
2	26	54.3	21.4	38.3	45.6	17.6		18.6	110.0	4.6	380.5			
2	27	49.4	26.9	38.5	37.9	14.3		17.0	110.1	4.6	372.6			

TABLE B5
NCWCD WEATHER STATION DATA
LONGMONT SOUTH
2005

Date		Temperature			Relative Humidity	Dew Point	Precipitation Total	Wind			Solar Radiation	ASCE Calculation		Calculation Pan
Month	Day	Max. (°F)	Min. (°F)	Average (°F)	Average (%)	Average (°F)	(inch)	Max (mph)	Total (miles)	Average (mph)	Total (Langl)	ET_r Alfalfa (inch)	ET_o Grass (inch)	(Kp)
2	28	49.9	20.4	34.4	50.6	16.3		15.7	84.7	3.5	408.9			
3	1	54.2	22.1	38.4	51.3	19.9		33.1	116.6	4.9	284.6	0.12	0.08	0.77
3	2	55.1	26.3	40.9	35.7	13.5		17.8	101.6	4.2	421.8	0.14	0.10	0.78
3	3	58.6	22.0	40.7	32.8	10.4		12.8	68.4	2.9	429.5	0.13	0.09	0.77
3	4	62.0	24.1	43.8	28.9	10.4		15.5	86.2	3.6	439.1	0.16	0.11	0.77
3	5	61.0	25.5	43.9	37.6	17.9		16.3	96.2	4.0	378.8	0.15	0.10	0.77
3	6	67.0	28.4	49.2	35.1	17.7		37.6	221.6	9.2	441.2	0.27	0.17	0.75
3	7	58.4	32.0	45.3	43.6	22.1		25.7	134.2	5.6	415.7	0.17	0.12	0.74
3	8	53.4	30.8	45.7	41.8	22.9	0.01	42.2	231.1	9.6	273.3	0.16	0.11	0.75
3	9	68.5	26.6	49.2	41.7	23.4		34.6	181.6	7.6	316.1	0.23	0.15	0.75
3	10	56.5	33.4	43.7	46.9	24.0		38.1	175.2	7.3	304.2	0.17	0.11	0.76
3	11	69.3	24.8	50.5	33.7	17.1		31.4	220.1	9.2	428.0	0.28	0.18	0.74
3	12	67.0	29.2	52.8	33.3	19.8	0.10	47.7	298.1	12.4	437.1	0.30	0.19	0.70
3	13	31.4	19.1	27.1	82.6	22.5	0.34	12.4	92.1	3.8	368.3	0.05	0.04	0.77
3	14	32.8	16.0	25.4	66.4	15.7		13.0	101.7	4.2	343.8	0.06	0.05	0.85
3	15	44.5	9.8	28.9	46.4	7.8		13.3	75.7	3.2	512.5	0.10	0.08	0.83
3	16	51.3	23.1	39.1	40.3	16.2		28.5	174.3	7.3	491.7	0.16	0.12	0.79
3	17	55.3	32.9	44.0	38.1	19.0		34.1	186.3	7.8	325.8	0.19	0.13	0.74
3	18	45.1	24.6	36.3	47.3	17.7		16.7	91.7	3.8	346.9	0.10	0.08	0.77
3	19	61.4	22.4	40.0	54.1	21.1		29.7	102.4	4.3	411.3	0.16	0.11	0.81
3	20	59.6	27.9	44.8	55.0	28.3	0.16	22.9	131.1	5.5	326.8	0.14	0.10	0.81
3	21	52.1	35.8	42.4	66.9	30.9	0.17	31.6	126.3	5.3	228.7	0.11	0.08	0.81
3	22	54.3	27.9	41.8	61.9	28.2		15.6	99.3	4.1	530.1	0.13	0.10	0.82
3	23	44.3	29.6	36.1	84.1	31.6	0.05	16.7	91.3	3.8	198.7	0.06	0.05	0.84
3	24	36.4	27.4	33.2	90.2	30.8	0.13	14.5	91.9	3.8	76.3	0.03	0.02	0.86
3	25	32.1	24.8	28.8	86.4	25.3	0.02	10.1	82.0	3.4	121.4	0.03	0.03	0.86
3	26	44.6	27.2	34.7	77.1	27.9	0.01	11.0	96.9	4.0	272.7	0.07	0.06	0.85
3	27	65.9	24.3	46.9	45.0	23.1		28.1	151.1	6.3	533.1	0.22	0.16	0.81
3	28	74.1	38.9	55.5	31.1	23.2		29.3	175.5	7.3	450.3	0.30	0.20	0.75

TABLE B5
NCWCD WEATHER STATION DATA
LONGMONT SOUTH
2005

Date		Temperature			Relative Humidity	Dew Point	Precipitation Total	Wind			Solar Radiation	ASCE Calculation		Calculation Pan
Month	Day	Max. (°F)	Min. (°F)	Average (°F)	Average (%)	Average (°F)	(inch)	Max (mph)	Total (miles)	Average (mph)	Total (Langl)	ET_r Alfalfa (inch)	ET_o Grass (inch)	(Kp)
3	29	55.0	34.2	44.4	52.9	27.2	0.10	28.2	168.3	7.0	225.1	0.15	0.10	0.74
3	30	52.4	28.7	39.1	55.7	23.2	0.07	27.4	139.0	5.8	366.8	0.14	0.10	0.78
3	31	47.3	25.9	37.6	52.2	20.9		32.1	105.8	4.4	398.6	0.11	0.09	0.80
4	1	65.7	21.5	45.0	38.4	15.6		20.0	114.9	4.8	587.4	0.22	0.16	0.79
4	2	68.9	37.8	54.9	23.7	17.1		21.3	140.5	5.9	397.4	0.24	0.17	0.75
4	3	75.1	30.9	54.0	30.0	19.2		25.0	124.6	5.2	526.9	0.27	0.19	0.73
4	4	72.5	38.3	55.5	34.2	25.1	0.01	30.0	137.5	5.7	351.6	0.24	0.17	0.75
4	5	57.8	38.5	50.0	41.7	27.0		44.4	384.0	16.0	292.0	0.24	0.16	0.70
4	6	64.5	28.5	48.7	42.8	24.9		20.3	96.4	4.0	594.7	0.19	0.15	0.73
4	7	76.0	29.9	53.8	37.8	24.7		15.1	83.4	3.5	599.4	0.23	0.17	0.80
4	8	72.9	36.1	53.8	36.9	25.5		39.0	250.0	10.4	338.6	0.33	0.21	0.75
4	9	63.4	38.1	50.6	35.6	22.6	0.03	30.9	191.5	8.0	416.9	0.25	0.17	0.71
4	10	41.3	30.6	33.7	91.5	31.4	0.33	50.7	116.0	4.8	217.8	0.06	0.05	0.78
4	11	54.5	30.0	39.2	65.7	27.4	0.08	15.0	114.7	4.8	576.7	0.15	0.12	0.83
4	12	60.7	30.8	46.5	47.3	26.2		15.1	118.9	5.0	610.5	0.19	0.15	0.80
4	13	66.2	31.5	48.8	55.8	32.2		18.6	95.9	4.0	568.6	0.19	0.15	0.81
4	14	72.9	36.7	52.1	61.5	37.8		18.9	122.7	5.1	518.0	0.22	0.17	0.82
4	15	53.7	36.5	45.8	51.8	28.9		15.7	100.9	4.2	499.5	0.15	0.12	0.81
4	16	67.2	32.0	50.6	62.8	37.4		10.6	66.7	2.8	612.2	0.17	0.14	0.83
4	17	74.6	40.0	56.8	58.2	40.5		15.4	91.6	3.8	486.6	0.20	0.16	0.85
4	18	79.4	36.9	59.4	42.0	31.3		22.1	121.9	5.1	600.6	0.28	0.21	0.81
4	19	67.0	41.6	54.6	55.6	39.2		28.0	144.7	6.0	403.2	0.19	0.14	0.79
4	20	52.7	39.6	44.4	83.1	39.6	0.22	21.7	117.7	4.9	163.9	0.08	0.06	0.82
4	21	61.5	34.4	47.3	56.6	29.5		35.1	239.2	10.0	636.0	0.24	0.18	0.79
4	22	58.4	30.4	46.7	59.4	32.1		16.1	111.5	4.6	507.5	0.15	0.13	0.79
4	23	64.1	40.0	50.6	59.9	36.5		12.9	105.8	4.4	640.6	0.20	0.16	0.82
4	24	49.4	38.7	43.8	74.1	36.0	0.16	23.3	171.3	7.1	205.8	0.09	0.07	0.81
4	25	57.6	40.6	47.7	67.5	37.0	0.24	34.3	148.0	6.2	409.8	0.15	0.12	0.80
4	26	65.6	31.7	48.4	57.0	31.6	0.01	33.2	166.2	6.9	505.2	0.22	0.16	0.80

TABLE B5
NCWCD WEATHER STATION DATA
LONGMONT SOUTH
2005

Date		Temperature			Relative Humidity	Dew Point	Precipitation	Wind			Solar Radiation	ASCE Calculation		Calculation Pan
Month	Day	Max. (°F)	Min. (°F)	Average (°F)	Average (%)	Average (°F)	Total (inch)	Max (mph)	Total (miles)	Average (mph)	Total (Langl)	ET_r Alfalfa (inch)	ET_o Grass (inch)	(Kp)
4	27	55.1	33.2	42.7	76.1	35.5	0.30	28.0	140.5	5.9	406.4	0.12	0.10	0.81
4	28	34.9	25.8	31.9	92.9	30.2	0.51	16.4	134.4	5.6	199.8	0.03	0.03	0.83
4	29	39.1	25.0	30.8	82.1	25.8	0.18	9.3	60.9	2.5	480.6	0.08	0.08	0.85
4	30	39.0	26.3	33.2	86.9	29.8	0.08	16.1	98.5	4.1	230.1	0.05	0.05	0.86
5	1	39.3	31.5	35.3	84.5	31.1	0.01	11.8	93.7	3.9	163.4	0.05	0.04	0.86
5	2	49.8	33.0	39.9	71.1	30.9		13.7	71.0	3.0	433.1	0.11	0.09	0.85
5	3	61.7	31.1	46.4	64.2	33.9		11.4	68.1	2.8	656.5	0.17	0.15	0.85
5	4	69.4	34.2	53.6	51.2	33.3		16.6	89.8	3.7	681.1	0.22	0.18	0.84
5	5	74.6	39.1	58.5	47.5	36.4		20.1	132.3	5.5	628.6	0.26	0.20	0.81
5	6	73.0	41.7	57.7	54.2	40.3	0.01	42.2	108.4	4.5	436.0	0.20	0.16	0.81
5	7	64.9	44.4	53.7	53.4	36.2	0.01	31.1	179.2	7.5	374.7	0.21	0.15	0.79
5	8	68.9	43.4	58.5	40.1	33.5		34.9	298.9	12.5	573.9	0.32	0.23	0.73
5	9	75.5	38.2	57.4	53.6	38.5		18.4	107.9	4.5	679.0	0.25	0.20	0.75
5	10	77.5	41.0	59.0	54.8	41.8		27.8	174.1	7.3	597.8	0.29	0.22	0.80
5	11	51.3	37.6	45.6	90.7	43.4	0.78	18.6	148.7	6.2	114.5	0.04	0.04	0.81
5	12	57.9	34.0	46.1	72.2	37.6		23.1	116.8	4.9	471.6	0.14	0.12	0.83
5	13	64.5	36.7	52.4	58.2	37.0		19.0	101.6	4.2	569.2	0.18	0.15	0.83
5	14	67.7	35.8	54.9	55.3	37.7		13.3	84.5	3.5	504.2	0.18	0.15	0.83
5	15	77.0	42.1	59.4	55.9	41.6	0.01	13.1	80.6	3.4	602.2	0.23	0.19	0.83
5	16	79.5	46.8	64.3	50.8	44.0		17.1	98.2	4.1	504.7	0.23	0.18	0.82
5	17	71.7	49.8	61.9	37.9	34.4		47.6	355.6	14.8	596.6	0.39	0.27	0.73
5	18	77.3	45.5	61.4	43.3	38.6		18.4	120.2	5.0	647.4	0.28	0.22	0.72
5	19	84.2	46.0	67.8	44.3	42.3		15.8	96.7	4.0	692.8	0.29	0.23	0.80
5	20	90.0	47.4	72.2	37.5	41.6		19.6	113.1	4.7	647.4	0.33	0.25	0.80
5	21	90.4	55.9	72.9	35.2	42.1		20.5	107.1	4.5	485.8	0.31	0.23	0.77
5	22	85.5	51.9	68.0	55.9	50.5		16.3	86.4	3.6	619.0	0.26	0.22	0.79
5	23	86.0	48.6	68.4	49.7	46.8	0.01	23.4	105.4	4.4	531.4	0.27	0.21	0.82
5	24	81.7	49.8	65.6	57.0	49.0	0.01	27.3	131.9	5.5	563.6	0.27	0.21	0.81
5	25	66.3	47.0	56.2	60.5	42.2		26.9	121.9	5.1	475.7	0.19	0.15	0.81

TABLE B5
NCWCD WEATHER STATION DATA
LONGMONT SOUTH
2005

Date		Temperature			Relative Humidity	Dew Point	Precipitation Total	Wind			Solar Radiation	ASCE Calculation		Calculation Pan
Month	Day	Max. (°F)	Min. (°F)	Average (°F)	Average (%)	Average (°F)	(inch)	Max (mph)	Total (miles)	Average (mph)	Total (Langl)	ET_r Alfalfa (inch)	ET_o Grass (inch)	(Kp)
5	26	66.2	49.8	57.2	50.2	38.5		16.0	106.4	4.4	616.8	0.22	0.18	0.80
5	27	70.7	48.5	58.7	46.0	36.9		21.0	99.7	4.2	676.8	0.25	0.20	0.79
5	28	80.1	40.9	61.7	41.4	35.5		12.8	94.2	3.9	693.3	0.28	0.22	0.79
5	29	55.8	49.2	52.0	71.9	43.1	0.09	23.2	122.7	5.1	122.0	0.09	0.07	0.81
5	30	53.4	45.5	49.5	91.4	47.2	0.63	24.6	175.3	7.3	171.3	0.06	0.05	0.82
5	31	72.2	43.8	57.3	63.9	43.1		13.9	89.3	3.7	718.0	0.23	0.20	0.82
6	1	82.9	45.0	64.7	49.9	43.0	0.01	28.5	102.1	4.3	594.4	0.27	0.22	0.82
6	2	71.4	51.1	58.9	73.2	49.6	0.04	27.3	138.6	5.8	443.2	0.19	0.15	0.81
6	3	68.9	46.1	55.5	78.7	48.6	0.20	28.1	147.0	6.1	328.8	0.16	0.12	0.82
6	4	60.1	44.5	50.1	81.9	44.5	0.86	16.9	72.6	3.0	252.6	0.10	0.08	0.84
6	5	75.8	42.1	60.7	59.7	44.4		14.8	88.7	3.7	698.1	0.24	0.20	0.85
6	6	84.7	45.1	65.4	51.6	45.9		17.6	106.2	4.4	634.9	0.28	0.23	0.83
6	7	76.6	49.6	63.3	45.9	41.2	0.01	14.4	102.8	4.3	649.1	0.26	0.21	0.81
6	8	80.0	45.6	64.2	40.4	38.7		46.8	137.1	5.7	707.1	0.32	0.25	0.79
6	9	69.7	49.1	57.8	68.5	46.8	0.36	20.7	150.7	6.3	495.3	0.21	0.16	0.79
6	10	56.4	44.5	51.7	83.3	46.8	0.66	15.5	101.6	4.2	178.4	0.07	0.06	0.83
6	11	71.0	40.1	56.5	68.4	44.8	0.21	31.6	93.3	3.9	695.5	0.22	0.19	0.85
6	12	59.7	50.3	54.8	77.5	47.8	0.01	27.7	117.0	4.9	291.6	0.11	0.09	0.84
6	13	71.5	48.2	60.5	39.7	34.7		27.2	202.5	8.4	751.8	0.34	0.25	0.78
6	14	75.6	42.5	61.2	60.9	46.0		15.6	100.9	4.2	735.3	0.25	0.21	0.78
6	15	82.3	49.3	65.9	55.9	48.6	0.02	26.2	89.3	3.7	500.4	0.23	0.19	0.83
6	16	82.4	49.1	67.3	55.3	49.9		20.5	93.1	3.9	644.2	0.26	0.22	0.83
6	17	87.4	50.6	69.9	57.5	52.6		19.9	115.2	4.8	711.6	0.31	0.25	0.83
6	18	88.7	51.6	72.1	58.1	55.6		11.8	76.7	3.2	711.6	0.28	0.24	0.84
6	19	88.4	58.5	73.6	51.6	53.4		36.0	104.5	4.4	591.3	0.29	0.23	0.83
6	20	85.7	55.9	73.8	46.5	51.4		29.7	109.9	4.6	475.2	0.26	0.20	0.81
6	21	90.2	55.5	73.2	48.5	51.9	0.03	35.7	128.6	5.4	609.5	0.33	0.25	0.80
6	22	90.3	56.6	74.1	49.1	52.3		21.8	86.8	3.6	638.3	0.29	0.24	0.81
6	23	86.9	57.3	72.5	49.8	51.7	0.05	24.2	122.8	5.1	601.0	0.30	0.24	0.81

TABLE B5
NCWCD WEATHER STATION DATA
LONGMONT SOUTH
2005

Date		Temperature			Relative Humidity	Dew Point	Precipitation	Wind			Solar Radiation	ASCE Calculation		Calculation Pan
Month	Day	Max. (°F)	Min. (°F)	Average (°F)	Average (%)	Average (°F)	Total (inch)	Max (mph)	Total (miles)	Average (mph)	Total (Langl)	ET_r Alfalfa (inch)	ET_o Grass (inch)	(Kp)
6	24	83.4	57.5	69.1	62.1	54.8	0.07	18.8	104.8	4.4	529.0	0.25	0.20	0.81
6	25	84.6	55.5	70.6	56.3	52.7		24.3	125.8	5.2	565.8	0.28	0.22	0.81
6	26	86.7	55.0	71.1	45.8	47.3	0.01	35.1	103.5	4.3	593.8	0.29	0.23	0.80
6	27	91.9	50.1	73.0	40.7	43.0		16.2	86.6	3.6	727.9	0.33	0.26	0.79
6	28	92.5	51.5	72.7	41.6	45.2		51.2	149.9	6.2	544.5	0.37	0.27	0.78
6	29	88.0	56.5	74.0	33.3	40.5		44.9	222.8	9.3	715.4	0.46	0.33	0.73
6	30	82.3	52.1	66.9	52.2	47.4		20.5	128.0	5.3	700.7	0.31	0.25	0.75
7	1	89.5	50.9	72.1	42.2	43.6		37.4	121.7	5.1	700.5	0.35	0.27	0.79
7	2	93.5	61.6	76.9	30.0	40.7	0.01	31.6	158.3	6.6	586.2	0.43	0.30	0.75
7	3	87.2	54.8	70.5	37.3	40.9	0.01	53.7	208.5	8.7	442.1	0.40	0.28	0.71
7	4	81.8	50.6	66.6	53.1	47.6		17.1	108.6	4.5	706.8	0.29	0.24	0.76
7	5	87.3	51.4	67.6	55.2	49.0		22.1	88.7	3.7	471.1	0.25	0.19	0.81
7	6	91.4	52.2	71.9	50.0	48.7		19.6	86.3	3.6	649.9	0.30	0.24	0.82
7	7	93.9	54.3	76.2	35.6	44.3		25.7	114.6	4.8	648.1	0.36	0.27	0.79
7	8	95.8	56.4	78.8	32.1	43.3		25.8	118.3	4.9	688.6	0.38	0.29	0.76
7	9	92.3	58.4	75.1	39.9	46.8	0.01	28.9	98.7	4.1	576.4	0.32	0.25	0.77
7	10	94.7	53.1	75.7	38.1	45.5		26.4	103.0	4.3	612.5	0.34	0.26	0.78
7	11	88.3	54.5	74.3	46.2	51.2		17.5	113.2	4.7	699.1	0.32	0.26	0.80
7	12	88.6	59.8	76.2	50.0	55.2		12.7	102.5	4.3	706.0	0.31	0.26	0.81
7	13	92.5	61.5	76.5	49.1	53.7		11.9	91.3	3.8	724.0	0.33	0.27	0.81
7	14	93.9	55.9	76.7	40.1	49.1		31.2	137.0	5.7	537.5	0.35	0.26	0.79
7	15	89.8	60.7	75.3	44.6	51.5		29.1	158.7	6.6	501.7	0.34	0.25	0.77
7	16	96.7	55.1	76.4	43.9	50.2	0.03	25.1	96.8	4.0	594.7	0.33	0.25	0.78
7	17	80.5	61.3	72.8	46.9	51.3		19.8	127.1	5.3	641.2	0.29	0.23	0.79
7	18	87.3	59.0	73.2	46.3	50.5		15.9	85.8	3.6	700.3	0.30	0.25	0.80
7	19	96.0	54.3	77.4	37.5	45.0		21.0	102.0	4.3	718.1	0.36	0.28	0.79
7	20	100.1	62.5	80.8	32.3	48.0		18.6	106.0	4.4	612.4	0.37	0.28	0.77
7	21	98.3	57.8	81.5	33.5	47.7		16.4	106.2	4.4	653.4	0.36	0.28	0.77
7	22	97.8	61.6	81.1	33.1	46.8		22.3	132.6	5.5	709.8	0.41	0.31	0.76

TABLE B5
NCWCD WEATHER STATION DATA
LONGMONT SOUTH
2005

Date		Temperature			Relative Humidity	Dew Point	Precipitation Total	Wind			Solar Radiation	ASCE Calculation		Calculation Pan
Month	Day	Max. (°F)	Min. (°F)	Average (°F)	Average (%)	Average (°F)	(inch)	Max (mph)	Total (miles)	Average (mph)	Total (Langl)	ET_r Alfalfa (inch)	ET_o Grass (inch)	(Kp)
7	23	95.9	58.6	76.9	41.3	50.5	0.02	29.0	126.6	5.3	544.9	0.35	0.26	0.76
7	24	87.5	64.6	73.8	58.7	57.2	0.06	30.3	117.4	4.9	579.1	0.29	0.23	0.79
7	25	84.1	60.5	68.6	74.4	59.0	0.23	35.0	121.9	5.1	339.1	0.21	0.16	0.81
7	26	67.3	57.8	61.1	84.8	56.5	0.15	15.6	85.0	3.5	210.7	0.10	0.08	0.84
7	27	82.6	52.1	67.0	62.3	51.1		18.3	69.8	2.9	686.8	0.25	0.21	0.85
7	28	91.6	51.0	73.2	44.6	46.4		13.5	77.6	3.2	704.7	0.30	0.25	0.82
7	29	94.1	53.7	77.7	33.1	42.8		18.6	100.4	4.2	707.1	0.34	0.27	0.79
7	30	92.3	56.5	75.8	40.5	49.0		21.0	101.7	4.2	502.5	0.29	0.22	0.78
7	31	88.4	57.3	74.3	49.0	52.7		13.3	86.4	3.6	473.2	0.24	0.19	0.80
8	1	88.5	59.1	73.8	49.6	53.0		31.6	91.4	3.8	528.8	0.26	0.21	0.81
8	2	89.2	59.7	74.2	47.7	52.0		29.9	122.1	5.1	447.9	0.28	0.21	0.80
8	3	82.5	60.8	68.5	67.4	56.5	0.16	25.2	118.1	4.9	438.5	0.23	0.18	0.80
8	4	63.2	57.8	60.1	88.3	56.7	0.30	29.0	92.4	3.9	134.6	0.07	0.06	0.83
8	5	79.7	58.3	66.1	75.1	57.5		9.6	55.4	2.3	600.2	0.20	0.18	0.86
8	6	86.4	54.3	70.8	51.5	49.1		13.2	78.9	3.3	678.6	0.27	0.23	0.84
8	7	87.7	51.4	72.0	43.6	46.0		11.5	70.4	2.9	682.6	0.27	0.22	0.81
8	8	91.4	51.7	73.7	43.7	47.0		13.3	71.7	3.0	664.7	0.28	0.23	0.81
8	9	84.6	60.3	71.5	54.2	53.6		17.5	105.0	4.4	392.9	0.23	0.18	0.81
8	10	81.6	59.5	68.5	75.2	59.9	0.07	27.6	71.2	3.0	349.5	0.16	0.13	0.83
8	11	81.2	61.2	69.2	70.0	57.9	0.02	15.9	75.8	3.2	408.1	0.18	0.15	0.85
8	12	77.5	57.0	65.8	73.2	56.4		13.3	85.3	3.6	474.5	0.18	0.16	0.84
8	13	63.5	53.1	57.5	85.6	53.1	0.08	32.2	159.1	6.6	240.4	0.10	0.08	0.83
8	14	72.4	54.9	61.1	80.4	54.6		14.0	73.7	3.1	390.7	0.14	0.12	0.84
8	15	85.0	49.4	67.8	60.7	51.2		13.5	68.6	2.9	585.3	0.22	0.19	0.85
8	16	83.7	52.7	67.2	60.5	51.5		16.7	97.1	4.0	466.8	0.22	0.18	0.83
8	17	88.2	50.4	71.4	40.9	41.8		33.0	179.6	7.5	594.0	0.38	0.27	0.79
8	18	88.8	51.5	70.2	42.5	44.0		29.9	126.5	5.3	435.7	0.30	0.21	0.76
8	19	87.3	49.8	69.5	46.6	45.6		16.7	91.6	3.8	550.0	0.26	0.20	0.79
8	20	87.1	50.4	67.4	53.2	47.9	0.97	34.0	124.4	5.2	451.0	0.28	0.20	0.80

TABLE B5
NCWCD WEATHER STATION DATA
LONGMONT SOUTH
2005

Date		Temperature			Relative Humidity	Dew Point	Precipitation	Wind			Solar Radiation	ASCE Calculation		Calculation Pan
Month	Day	Max. (°F)	Min. (°F)	Average (°F)	Average (%)	Average (°F)	Total (inch)	Max (mph)	Total (miles)	Average (mph)	Total (Langl)	ET_r Alfalfa (inch)	ET_o Grass (inch)	(Kp)
8	21	84.3	57.8	68.7	57.1	51.1	0.04	26.4	122.1	5.1	558.5	0.28	0.21	0.80
8	22	80.4	53.1	66.9	61.9	52.7	0.01	22.6	86.3	3.6	516.7	0.21	0.17	0.81
8	23	85.2	53.6	65.1	67.2	52.8	0.01	26.8	102.0	4.3	516.1	0.24	0.19	0.83
8	24	89.2	49.6	71.0	49.3	46.6		13.9	79.9	3.3	605.3	0.26	0.21	0.82
8	25	87.2	54.8	71.3	41.7	45.4		33.8	155.7	6.5	449.9	0.32	0.22	0.79
8	26	89.7	51.9	71.0	45.5	45.6		29.7	138.9	5.8	533.3	0.32	0.24	0.77
8	27	85.4	52.4	68.2	50.2	46.8		24.5	116.1	4.8	426.3	0.26	0.19	0.79
8	28	87.4	47.0	69.0	42.8	41.1		14.3	78.5	3.3	575.8	0.25	0.20	0.80
8	29	91.0	50.5	71.8	34.6	38.1		15.1	80.5	3.4	581.6	0.28	0.21	0.79
8	30	94.1	49.7	75.5	27.7	35.9		24.2	158.7	6.6	580.8	0.40	0.28	0.75
8	31	74.4	47.5	60.9	42.0	36.2		23.0	135.4	5.6	582.7	0.26	0.20	0.75
9	1	80.6	42.2	63.6	42.3	38.5		12.3	84.6	3.5	585.0	0.23	0.18	0.79
9	2	87.9	46.3	69.4	44.3	43.0		15.6	86.5	3.6	587.1	0.26	0.20	0.81
9	3	90.1	52.2	72.0	37.2	41.9		13.6	99.1	4.1	550.2	0.28	0.21	0.79
9	4	85.8	57.2	72.7	37.0	43.9		18.1	117.1	4.9	526.5	0.28	0.21	0.77
9	5	87.3	52.9	70.8	45.7	46.5	0.01	15.8	78.6	3.3	443.0	0.22	0.17	0.79
9	6	76.2	53.6	65.4	56.5	49.4	0.01	16.4	95.0	4.0	388.6	0.18	0.14	0.81
9	7	88.6	52.8	69.5	57.5	51.2		14.9	65.9	2.7	545.6	0.22	0.18	0.83
9	8	86.4	54.1	70.9	54.5	51.9		20.9	101.9	4.2	349.7	0.21	0.16	0.82
9	9	86.1	59.4	72.1	48.8	50.7	0.02	32.1	111.7	4.7	390.0	0.24	0.18	0.80
9	10	86.8	56.0	71.8	40.6	44.5		27.1	139.8	5.8	531.0	0.31	0.22	0.78
9	11	86.7	51.5	70.7	34.3	38.7		20.3	125.2	5.2	517.3	0.29	0.21	0.76
9	12	83.3	54.3	68.7	31.7	35.3		26.2	120.4	5.0	538.2	0.29	0.21	0.75
9	13	65.9	48.6	55.8	50.0	36.6	0.04	20.2	177.8	7.4	320.9	0.21	0.15	0.75
9	14	67.0	43.1	53.9	68.4	43.4		26.2	119.6	5.0	323.1	0.14	0.11	0.79
9	15	76.6	39.4	59.8	43.1	34.0		20.7	93.6	3.9	532.1	0.22	0.16	0.81
9	16	80.6	40.0	60.6	41.6	34.6		17.1	87.2	3.6	429.3	0.21	0.16	0.80
9	17	83.2	40.0	65.2	29.6	29.7		18.5	94.7	3.9	531.6	0.25	0.18	0.79
9	18	76.7	43.1	61.1	44.7	39.1		12.0	87.2	3.6	463.4	0.19	0.15	0.79

TABLE B5
NCWCD WEATHER STATION DATA
LONGMONT SOUTH
2005

Date		Temperature			Relative Humidity	Dew Point	Precipitation Total	Wind			Solar Radiation	ASCE Calculation		Calculation Pan
Month	Day	Max. (°F)	Min. (°F)	Average (°F)	Average (%)	Average (°F)	(inch)	Max (mph)	Total (miles)	Average (mph)	Total (Langl)	ET_r Alfalfa (inch)	ET_o Grass (inch)	(Kp)
9	19	79.9	43.9	61.3	51.6	42.0		14.1	75.9	3.2	489.4	0.19	0.15	0.82
9	20	86.5	41.3	66.5	34.4	33.4		15.6	96.4	4.0	461.5	0.25	0.18	0.80
9	21	85.1	56.9	68.2	48.5	47.2	0.14	47.6	103.6	4.3	251.3	0.21	0.15	0.79
9	22	64.6	47.0	57.2	83.3	52.1		18.9	103.3	4.3	224.7	0.08	0.07	0.82
9	23	81.1	41.9	60.0	65.4	46.8	0.01	12.1	73.8	3.1	443.4	0.17	0.14	0.85
9	24	67.8	45.1	56.8	72.8	48.3		12.6	77.7	3.2	317.3	0.11	0.09	0.86
9	25	71.2	47.8	56.2	75.7	47.8	0.01	13.8	70.5	2.9	383.4	0.13	0.11	0.86
9	26	77.3	42.5	58.7	63.2	44.2		19.5	95.9	4.0	473.2	0.19	0.14	0.84
9	27	85.3	45.2	64.4	54.1	45.5	0.07	48.4	112.6	4.7	314.2	0.22	0.15	0.82
9	28	62.1	37.5	49.7	75.8	42.3	0.01	29.1	87.8	3.7	156.7	0.08	0.06	0.84
9	29	73.1	34.5	53.2	67.5	40.9	0.01	12.7	79.8	3.3	362.7	0.14	0.11	0.86
9	30	84.0	42.0	64.3	42.7	36.8		14.8	87.2	3.6	465.2	0.22	0.16	0.83
10	1	85.6	46.0	67.4	36.1	37.0		15.1	82.1	3.4	448.1	0.21	0.15	0.80
10	2	85.8	51.7	68.7	28.6	32.9		25.3	128.0	5.3	424.5	0.28	0.19	0.76
10	3	74.4	40.7	58.8	52.8	40.8		15.0	88.0	3.7	435.2	0.16	0.12	0.78
10	4	56.0	42.2	47.2	79.8	41.2	0.26	21.2	97.2	4.0	57.3	0.06	0.05	0.84
10	5	59.0	38.4	47.8	51.2	30.3		25.4	169.3	7.1	436.6	0.17	0.12	0.81
10	6	55.9	32.7	43.4	59.1	29.6		12.7	55.1	2.3	417.9	0.10	0.08	0.80
10	7	67.5	28.5	47.3	61.2	33.2		9.3	58.3	2.4	430.2	0.12	0.09	0.85
10	8	78.4	33.9	56.1	48.9	34.2		14.8	92.9	3.9	411.9	0.19	0.13	0.84
10	9	56.0	37.8	47.5	82.3	42.3	0.77	29.5	134.8	5.6	46.7	0.06	0.04	0.83
10	10	40.1	36.7	38.3	91.2	35.9	0.95	20.8	110.0	4.6	84.3	0.03	0.03	0.84
10	11	52.3	37.7	43.7	80.5	37.9		12.1	52.2	2.2	329.8	0.07	0.06	0.86
10	12	61.3	35.9	48.1	70.8	38.2		9.3	57.4	2.4	279.3	0.08	0.07	0.87
10	13	71.8	34.0	52.4	57.3	35.6		20.0	80.4	3.4	390.0	0.14	0.10	0.85
10	14	74.5	37.1	55.6	52.4	35.9	0.01	18.5	104.6	4.4	394.7	0.18	0.12	0.82
10	15	70.7	36.9	53.7	60.9	39.6		12.0	81.4	3.4	383.2	0.13	0.10	0.83
10	16	79.6	40.6	58.8	51.4	37.8		18.9	84.5	3.5	378.1	0.17	0.12	0.83
10	17	79.9	46.0	61.1	44.4	36.9		11.3	77.4	3.2	376.8	0.17	0.12	0.81

TABLE B5
NCWCD WEATHER STATION DATA
LONGMONT SOUTH
2005

Date		Temperature			Relative Humidity	Dew Point	Precipitation Total	Wind			Solar Radiation	ASCE Calculation		Calculation Pan
Month	Day	Max. (°F)	Min. (°F)	Average (°F)	Average (%)	Average (°F)	(inch)	Max (mph)	Total (miles)	Average (mph)	Total (Langl)	ET_r Alfalfa (inch)	ET_o Grass (inch)	(Kp)
10	18	77.5	38.7	57.9	48.2	35.0		14.3	79.1	3.3	366.8	0.16	0.11	0.80
10	19	51.4	41.9	45.6	84.2	41.0	0.25	12.8	92.3	3.8	90.6	0.05	0.04	0.83
10	20	67.6	35.9	51.5	73.1	42.4	0.01	14.3	61.3	2.6	249.3	0.09	0.07	0.86
10	21	52.1	38.5	47.2	88.0	43.8	0.05	10.8	60.3	2.5	89.9	0.03	0.03	0.87
10	22	61.6	34.2	47.6	71.2	37.8		15.2	79.3	3.3	349.9	0.09	0.07	0.86
10	23	53.4	31.8	41.7	63.5	29.8		15.4	56.3	2.3	298.2	0.07	0.06	0.85
10	24	74.0	27.8	49.3	54.2	29.3		9.4	68.5	2.9	358.6	0.14	0.10	0.84
10	25	70.5	35.9	52.3	50.6	32.4		9.3	55.3	2.3	321.2	0.11	0.08	0.83
10	26	68.3	35.7	51.1	55.1	33.7		15.1	64.1	2.7	335.2	0.11	0.08	0.83
10	27	62.1	32.9	46.8	63.9	34.2		7.1	45.2	1.9	242.6	0.07	0.06	0.84
10	28	65.5	37.3	51.3	63.2	38.5		8.3	54.1	2.3	177.6	0.08	0.06	0.85
10	29	61.2	36.7	49.8	69.6	39.9	0.09	24.5	105.7	4.4	157.7	0.08	0.06	0.85
10	30	51.4	31.7	42.3	80.4	36.3	0.02	19.9	82.2	3.4	130.2	0.05	0.04	0.85
10	31	59.0	30.0	45.4	56.2	27.3		27.6	172.5	7.2	324.0	0.15	0.10	0.82
11	1	72.7	39.1	56.8	31.4	25.2		28.9	153.0	6.4	298.5			
11	2	78.3	36.5	56.5	33.2	25.0		19.9	128.9	5.4	298.9			
11	3	68.9	40.7	61.5	20.8	20.1		51.1	363.3	15.1	265.9			
11	4	64.2	31.7	47.0	50.9	27.7		41.6	173.4	7.2	295.4			
11	5	52.6	31.5	43.9	46.0	23.8		33.7	237.3	9.9	257.6			
11	6	66.5	25.0	48.1	44.2	24.8		28.4	141.5	5.9	209.4			
11	7	70.0	42.2	55.3	35.8	28.1	0.01	16.7	112.7	4.7	258.4			
11	8	75.4	35.6	58.9	30.0	24.8		37.2	215.7	9.0	285.3			
11	9	50.5	30.5	38.7	50.8	20.9		12.5	53.6	2.2	205.2			
11	10	76.0	31.5	51.6	48.4	30.7		12.8	82.1	3.4	238.5			
11	11	64.8	41.0	51.9	53.7	35.0	0.02	39.8	105.3	4.4	154.5			
11	12	62.1	34.0	49.3	47.8	28.9	0.01	46.1	263.7	11.0	270.4			
11	13	45.7	26.9	37.6	55.7	22.9		20.6	127.5	5.3	227.8			
11	14	57.3	26.6	38.7	62.7	26.5	0.06	42.4	178.0	7.4	161.8			
11	15	40.0	17.1	27.6	48.5	9.3		23.8	91.3	3.8	282.2			

TABLE B5
NCWCD WEATHER STATION DATA
LONGMONT SOUTH
2005

Date		Temperature			Relative Humidity	Dew Point	Precipitation Total	Wind			Solar Radiation	ASCE Calculation		Calculation Pan
Month	Day	Max. (°F)	Min. (°F)	Average (°F)	Average (%)	Average (°F)	(inch)	Max (mph)	Total (miles)	Average (mph)	Total (Langl)	ET_r Alfalfa (inch)	ET_o Grass (inch)	(Kp)
11	16	45.1	13.7	29.4	56.6	14.6		11.5	57.7	2.4	271.8			
11	17	39.2	21.3	30.2	80.7	25.4	0.12	14.0	85.1	3.5	85.3			
11	18	59.8	19.1	41.3	49.8	20.2		27.5	185.4	7.7	276.1			
11	19	51.4	22.8	39.7	46.0	19.4		26.6	134.1	5.6	244.2			
11	20	65.0	21.1	41.5	40.9	16.1		11.7	70.1	2.9	264.5			
11	21	60.9	25.2	43.6	42.5	20.5		12.1	83.3	3.5	254.3			
11	22	65.0	25.2	42.9	43.9	20.0		13.8	94.1	3.9	258.6			
11	23	64.0	25.6	43.1	36.6	16.8		10.6	75.0	3.1	254.9			
11	24	56.9	25.0	39.4	39.7	15.3		14.5	78.5	3.3	249.6			
11	25	67.8	22.5	42.0	33.6	11.9		11.5	73.6	3.1	260.2			
11	26	60.4	24.8	41.8	35.2	14.2		40.5	169.0	7.0	196.3			
11	27	45.5	23.2	34.3	36.4	9.7		24.3	141.5	5.9	153.9			
11	28	41.6	16.7	30.0	30.3	1.3		33.9	219.3	9.1	248.9			
11	29	44.4	9.5	27.0	42.6	4.6		17.8	77.1	3.2	232.8			
11	30	42.3	19.2	30.8	37.7	6.4		40.5	236.8	9.9	209.2			
12	1	38.2	11.6	24.6	48.4	7.3		16.4	60.2	2.5	221.3			
12	2	59.3	19.1	36.3	53.9	20.3	0.06	27.7	119.0	5.0	186.3			
12	3	38.8	22.0	30.1	70.0	22.0	0.06	25.0	169.8	7.1	129.8			
12	4	33.9	16.7	24.9	43.3	4.6		34.3	229.5	9.6	225.0			
12	5	37.3	13.6	29.6	23.7	-3.5		62.5	437.5	18.2	216.6			
12	6	30.8	1.7	14.5	64.1	3.0	0.10	28.6	48.6	2.0	75.3			
12	7	15.3	-12.0	-0.6	75.5	-6.1		15.5	37.9	1.6	234.6			
12	8	20.6	-13.3	4.1	68.2	-3.1		13.3	57.8	2.4	228.8			
12	9	41.3	3.5	23.0	57.7	10.6		15.6	88.4	3.7	233.8			
12	10	42.9	15.6	28.8	55.6	14.4		14.2	92.1	3.8	230.9			
12	11	49.8	14.2	30.0	58.0	15.7		9.1	62.2	2.6	229.6			
12	12	51.7	18.3	34.1	56.7	19.5		7.7	55.7	2.3	223.6			
12	13	51.4	23.1	38.5	46.5	18.2		35.6	262.0	10.9	170.5			
12	14	37.1	19.7	27.6	31.2	0.1		29.7	243.5	10.1	231.8			

TABLE B5
NCWCD WEATHER STATION DATA
LONGMONT SOUTH
2005

Date		Temperature			Relative Humidity	Dew Point	Precipitation Total	Wind			Solar Radiation	ASCE Calculation		Calculation Pan
Month	Day	Max. (°F)	Min. (°F)	Average (°F)	Average (%)	Average (°F)	(inch)	Max (mph)	Total (miles)	Average (mph)	Total (Langl)	ET_r Alfalfa (inch)	ET_o Grass (inch)	(Kp)
12	15	37.4	14.4	25.6	33.8	0.0		20.0	166.3	6.9	217.0			
12	16	28.2	6.0	17.0	66.8	7.6		14.5	66.8	2.8	215.5			
12	17	15.3	8.0	12.3	84.3	8.6	0.03	11.7	48.3	2.0	100.8			
12	18	18.4	6.3	11.1	80.4	6.2		6.7	17.9	0.7	122.7			
12	19	38.2	3.6	20.3	76.2	15.3		10.5	60.8	2.5	217.8			
12	20	44.9	19.6	31.5	75.7	24.7		9.5	52.6	2.2	203.0			
12	21	64.4	25.7	45.0	51.0	26.5		24.2	143.4	6.0	172.4			
12	22	64.8	30.2	53.7	33.6	24.0		40.4	309.9	12.9	109.0			
12	23	59.3	32.1	48.3	31.6	19.2	0.01	48.4	290.5	12.1	209.0			
12	24	55.3	22.9	37.0	43.1	15.3		11.5	74.7	3.1	200.6			
12	25	71.8	25.4	44.6	44.3	22.7		12.3	79.5	3.3	216.5			
12	26	63.1	36.4	49.6	30.2	18.6		27.0	144.9	6.0	171.2			
12	27	56.9	32.9	45.6	34.4	18.4		30.3	206.3	8.6	213.0			
12	28	61.2	26.4	42.7	44.7	22.1		29.1	117.1	4.9	182.5			
12	29	52.1	26.2	41.2	42.8	19.2		52.4	307.4	12.8	209.5			
12	30	48.7	18.6	33.2	40.9	9.5		24.0	120.5	5.0	201.5			
12	31	65.7	21.4	46.5	41.7	23.4		26.4	144.8	6.0	171.9			
							13.89						**39.80**	

TABLE B6
NCWCD WEATHER STATION DATA
LONGMONT SOUTH
2004

Date		Temperature			Relative Humidity	Dew Point	Precipitation Total	Wind			Solar Radiation	ASCE Calculation		Calculation Pan
Month	Day	Max. (°F)	Min. (°F)	Average (°F)	Average (%)	Average (°F)	(inch)	Max (mph)	Total (miles)	Average (mph)	Total (Langl)	ET_r Alfalfa (inch)	ET_o Grass (inch)	(Kp)
1	1	53.9	37.1	46.2	22.2	9.6		35.2	208.7	8.7	170.2			
1	2	48.1	24.7	37.9	56.9	23.3		36.5	153.0	6.4	146.0			
1	3	26.4	20.0	24.1	96.6	23.3	0.27	15.0	109.0	4.5	138.0			
1	4	22.9	6.7	16.8	81.9	12.9	0.01	20.6	62.9	2.6	219.8			
1	5	21.3	-13.9	-3.1	78.0	-8.2	0.04	31.5	70.7	2.9	207.9			
1	6	24.8	-15.9	3.3	74.1	-2.2		15.5	49.5	2.1	281.4			
1	7	36.6	4.2	21.5	71.9	14.8		17.2	66.2	2.8	180.3			
1	8	53.0	19.2	39.0	47.0	19.5	0.02	40.2	171.9	7.2	250.6			
1	9	48.0	23.4	35.3	65.6	24.7		26.2	79.4	3.3	241.0			
1	10	56.4	21.0	37.5	69.0	27.5		10.9	54.3	2.3	249.6			
1	11	51.2	27.0	37.1	58.5	23.2		11.8	86.7	3.6	254.2			
1	12	52.8	22.1	35.6	59.4	21.9		11.2	86.6	3.6	252.6			
1	13	55.8	21.4	36.9	51.2	18.9		12.3	66.4	2.8	256.7			
1	14	55.4	21.4	38.4	48.3	19.8		12.6	92.3	3.8	240.4			
1	15	55.7	25.7	38.4	50.5	20.4		7.4	53.2	2.2	188.5			
1	16	46.0	26.1	37.1	58.0	23.4		13.8	77.2	3.2	117.4			
1	17	47.0	22.1	34.4	64.9	23.1		9.2	65.1	2.7	249.9			
1	18	45.2	19.0	27.8	76.9	21.0		7.5	45.0	1.9	258.9			
1	19	38.0	18.2	27.9	83.2	23.2		7.2	31.5	1.3	143.5			
1	20	33.4	25.0	29.3	88.3	26.5	0.02	6.1	34.6	1.4	99.6			
1	21	45.7	18.2	30.0	71.0	20.9	0.01	9.3	51.6	2.1	256.0			
1	22	46.8	19.7	30.3	57.2	15.8		12.6	76.9	3.2	249.5			
1	23	60.8	22.7	43.6	31.6	12.2	0.02	23.4	154.8	6.5	142.3			
1	24	47.8	21.6	33.8	49.2	15.8		11.4	73.6	3.1	257.3			
1	25	44.3	14.3	24.9	83.5	20.2	0.06	17.8	57.8	2.4	148.7			
1	26	33.4	1.3	19.1	52.1	2.6	0.01	19.5	132.0	5.5	298.3			
1	27	42.4	4.9	28.7	44.6	9.5	0.05	42.5	251.0	10.5	268.2			
1	28	53.3	20.5	37.6	43.6	16.0		33.3	171.4	7.1	292.4			
1	29	51.1	26.5	40.0	44.4	19.5		31.2	205.6	8.6	256.5			

TABLE B6
NCWCD WEATHER STATION DATA
LONGMONT SOUTH
2004

Date		Temperature			Relative Humidity	Dew Point	Precipitation Total	Wind			Solar Radiation	ASCE Calculation		Calculation Pan
Month	Day	Max. (°F)	Min. (°F)	Average (°F)	Average (%)	Average (°F)	(inch)	Max (mph)	Total (miles)	Average (mph)	Total (Langl)	ET_r Alfalfa (inch)	ET_o Grass (inch)	(Kp)
1	30	55.5	27.4	43.7	44.5	22.5		22.2	103.5	4.3	205.0			
1	31	39.0	21.1	30.0	79.4	24.1	0.13	16.8	95.5	4.0	63.7			
2	1	39.2	13.2	23.6	70.1	14.8		11.3	69.2	2.9	297.4			
2	2	40.0	13.1	26.1	62.2	13.1		19.1	80.7	3.4	315.5			
2	3	33.4	13.2	24.6	71.5	16.3	0.01	9.3	54.5	2.3	153.3			
2	4	27.1	19.8	24.1	95.0	23.0	0.14	17.9	116.6	4.9	186.7			
2	5	28.5	14.6	21.9	89.7	19.3	0.08	18.6	87.6	3.6	203.8			
2	6	32.6	9.3	22.2	65.7	12.4		14.5	102.5	4.3	330.8			
2	7	37.7	2.0	20.2	73.4	12.7		11.8	82.7	3.4	334.7			
2	8	40.9	13.6	25.5	70.7	16.9		15.8	88.1	3.7	238.0			
2	9	37.5	10.1	24.8	62.8	12.4		12.3	67.2	2.8	328.5			
2	10	42.7	8.2	25.1	57.9	12.0		11.3	63.5	2.6	322.7			
2	11	28.7	2.9	19.4	71.0	12.2	0.03	19.1	61.4	2.6	180.3			
2	12	29.3	-3.5	11.8	63.6	0.7		11.7	72.3	3.0	361.7			
2	13	48.9	4.3	27.4	54.7	11.8		9.4	66.8	2.8	300.9			
2	14	48.9	18.7	33.2	50.0	15.4		9.8	73.2	3.0	366.4			
2	15	49.0	21.6	34.6	61.1	21.6		17.8	95.6	4.0	347.5			
2	16	46.2	24.2	36.4	43.8	15.3		13.3	93.3	3.9	351.8			
2	17	56.7	21.6	38.0	60.0	24.9		15.4	84.0	3.5	282.9			
2	18	64.2	38.5	51.4	42.7	29.2		14.8	109.6	4.6	293.3			
2	19	53.9	32.3	41.3	62.4	28.3	0.03	19.2	137.2	5.7	107.1			
2	20	47.5	26.4	36.8	61.4	23.5		16.6	91.2	3.8	360.9			
2	21	47.1	23.8	34.3	69.2	24.7		8.3	50.0	2.1	238.6			
2	22	49.4	24.7	37.3	70.5	28.1	0.01	11.7	73.2	3.0	284.0			
2	23	47.6	28.4	36.7	81.5	31.1		11.2	60.8	2.5	292.1			
2	24	49.6	23.5	35.3	74.6	27.4		10.7	60.2	2.5	327.4			
2	25	59.5	27.8	42.1	49.6	22.2		16.2	100.9	4.2	400.1			
2	26	61.5	26.3	44.0	43.3	21.2		22.6	127.6	5.3	336.2			
2	27	59.0	33.6	48.0	36.2	21.7		30.8	206.6	8.6	282.1			

TABLE B6
NCWCD WEATHER STATION DATA
LONGMONT SOUTH
2004

Date		Temperature			Relative Humidity	Dew Point	Precipitation Total	Wind			Solar Radiation	ASCE Calculation		Calculation Pan
Month	Day	Max. (°F)	Min. (°F)	Average (°F)	Average (%)	Average (°F)	(inch)	Max (mph)	Total (miles)	Average (mph)	Total (Langl)	ET_r Alfalfa (inch)	ET_o Grass (inch)	(Kp)
2	28	44.1	25.6	35.3	71.0	27.0	0.09	21.1	92.0	3.8	197.8			
2	29	38.4	26.5	33.0	77.5	26.3	0.06	21.8	88.9	3.7	145.3			
3	1	47.0	28.0	36.4	51.0	19.1		20.1	137.0	5.7	341.8	0.12	0.08	0.76
3	2	47.0	25.2	34.8	68.3	24.1		12.1	67.5	2.8	406.3	0.08	0.07	0.81
3	3	52.4	19.8	35.0	68.0	23.6		21.9	132.2	5.5	396.7	0.12	0.08	0.83
3	4	47.4	19.7	32.6	82.4	27.3	0.17	19.4	81.2	3.4	333.2	0.07	0.06	0.84
3	5	39.2	24.6	32.3	75.2	24.5	0.13	22.1	124.8	5.2	387.6	0.07	0.06	0.85
3	6	53.9	30.8	43.5	41.7	20.9		39.4	229.0	9.5	405.3	0.18	0.12	0.78
3	7	64.0	24.8	42.2	51.6	24.1		17.8	120.6	5.0	451.9	0.17	0.12	0.76
3	8	68.3	30.6	49.1	45.8	25.9		24.0	115.6	4.8	376.9	0.19	0.13	0.80
3	9	70.6	32.0	51.2	46.2	28.0		19.1	80.8	3.4	462.7	0.17	0.12	0.80
3	10	58.2	28.9	44.2	51.8	26.3	0.01	35.4	177.7	7.4	193.0	0.15	0.10	0.79
3	11	57.9	21.1	39.3	56.9	23.0		16.9	111.7	4.7	465.4	0.14	0.10	0.80
3	12	68.9	23.6	45.3	46.8	23.0		14.4	71.8	3.0	441.6	0.16	0.12	0.82
3	13	64.3	37.3	49.2	36.1	22.5		28.9	159.6	6.7	401.8	0.22	0.15	0.78
3	14	55.8	23.6	42.2	45.8	21.8		30.0	126.9	5.3	424.3	0.14	0.10	0.77
3	15	52.4	34.7	44.5	43.2	23.1		30.3	128.2	5.3	399.9	0.14	0.10	0.79
3	16	63.7	29.1	49.1	34.1	19.1		40.9	238.0	9.9	473.6	0.26	0.17	0.74
3	17	68.1	32.0	56.9	26.2	21.0		40.3	325.0	13.5	492.8	0.32	0.21	0.68
3	18	69.4	30.1	52.1	39.7	25.7		25.1	107.9	4.5	476.0	0.19	0.14	0.73
3	19	79.1	45.1	64.7	19.7	20.7		27.6	176.0	7.3	433.6	0.32	0.22	0.75
3	20	62.3	35.4	48.1	40.6	24.1		20.2	103.2	4.3	505.4	0.18	0.13	0.74
3	21	60.8	25.9	43.5	47.1	23.4		11.3	71.1	3.0	507.3	0.14	0.11	0.80
3	22	78.3	32.8	56.0	36.8	25.7		23.4	138.6	5.8	514.7	0.28	0.19	0.79
3	23	75.4	43.9	59.4	36.4	31.9		38.5	134.0	5.6	198.3	0.22	0.15	0.76
3	24	73.3	42.9	56.9	44.6	33.7		26.4	119.0	5.0	377.0	0.21	0.15	0.77
3	25	73.2	43.8	59.3	37.6	30.6		22.4	132.7	5.5	449.4	0.24	0.17	0.76
3	26	76.7	34.3	56.8	38.2	28.2		19.7	129.0	5.4	507.3	0.26	0.18	0.76
3	27	57.3	36.7	47.1	38.8	22.7	0.01	38.9	221.5	9.2	452.0	0.22	0.15	0.74

TABLE B6
NCWCD WEATHER STATION DATA
LONGMONT SOUTH
2004

Date		Temperature			Relative Humidity	Dew Point	Precipitation Total	Wind			Solar Radiation	ASCE Calculation		Calculation Pan
Month	Day	Max. (°F)	Min. (°F)	Average (°F)	Average (%)	Average (°F)	(inch)	Max (mph)	Total (miles)	Average (mph)	Total (Langl)	ET_r Alfalfa (inch)	ET_o Grass (inch)	(Kp)
3	28	47.4	25.9	38.3	52.3	21.8	0.01	25.1	99.9	4.2	231.1	0.09	0.07	0.76
3	29	66.8	20.4	46.2	37.8	15.4		17.2	101.4	4.2	560.7	0.20	0.15	0.80
3	30	70.4	25.9	49.7	28.6	14.4		15.9	81.3	3.4	572.9	0.21	0.15	0.78
3	31	77.4	28.9	54.9	24.6	14.6		15.6	90.1	3.8	563.3	0.24	0.18	0.76
4	1	79.9	35.3	59.6	21.1	16.3		24.8	148.5	6.2	531.8	0.32	0.22	0.73
4	2	58.2	38.0	48.8	56.4	33.6	0.20	29.7	108.5	4.5	285.3	0.13	0.10	0.76
4	3	43.8	34.3	38.6	89.8	35.8	0.12	13.8	50.7	2.1	112.3	0.04	0.04	0.84
4	4	64.7	30.9	48.1	68.7	36.5		8.6	58.9	2.5	497.2	0.14	0.12	0.87
4	5	65.5	37.5	51.1	69.0	39.9	0.21	30.8	182.4	7.6	329.8	0.17	0.12	0.83
4	6	64.5	44.5	52.6	65.2	40.3	0.05	22.6	132.6	5.5	507.8	0.18	0.14	0.80
4	7	60.8	36.0	49.8	68.0	39.2		28.1	152.9	6.4	410.1	0.14	0.11	0.81
4	8	63.4	44.5	50.5	75.2	42.4	0.20	26.1	103.0	4.3	310.0	0.13	0.10	0.82
4	9	48.4	31.3	38.3	93.9	36.9	0.52	12.4	65.2	2.7	90.6	0.04	0.03	0.85
4	10	36.0	27.3	31.5	97.3	30.7	0.57	12.9	67.6	2.8	392.2	0.06	0.06	0.87
4	11	49.1	22.8	36.6	65.2	23.9	0.02	41.4	68.3	2.8	591.7	0.12	0.11	0.86
4	12	47.2	25.9	34.5	78.3	27.7	0.02	13.6	52.1	2.2	531.5	0.10	0.09	0.86
4	13	68.4	31.2	50.2	56.9	32.4		15.6	94.1	3.9	599.8	0.20	0.16	0.85
4	14	71.0	36.2	54.8	44.5	30.8		24.3	127.1	5.3	409.2	0.22	0.16	0.81
4	15	70.5	40.8	57.3	33.3	26.6		25.6	140.7	5.9	572.9	0.26	0.19	0.76
4	16	73.3	34.2	57.0	38.8	29.5		21.5	128.4	5.3	592.2	0.25	0.19	0.76
4	17	72.6	36.7	55.5	46.1	34.2		15.6	109.0	4.5	560.6	0.22	0.17	0.79
4	18	62.3	41.9	54.1	35.7	26.6		45.3	255.8	10.7	586.2	0.28	0.20	0.75
4	19	63.5	33.6	49.9	49.8	31.1		24.7	107.5	4.5	469.1	0.17	0.14	0.75
4	20	63.9	40.5	52.8	32.3	23.1		37.0	276.6	11.5	604.2	0.31	0.22	0.74
4	21	49.4	33.3	40.4	74.9	32.5	0.21	23.5	81.6	3.4	170.8	0.07	0.06	0.76
4	22	43.8	32.9	38.6	90.9	36.2	0.12	16.0	52.3	2.2	142.8	0.04	0.04	0.86
4	23	46.9	31.8	38.1	86.4	34.2	0.19	15.2	97.7	4.1	227.6	0.07	0.06	0.86
4	24	63.9	27.8	46.0	66.9	33.6		29.2	116.0	4.8	593.1	0.18	0.15	0.85
4	25	55.4	37.1	45.4	72.2	36.5	0.17	15.8	95.9	4.0	493.2	0.13	0.11	0.84

TABLE B6
NCWCD WEATHER STATION DATA
LONGMONT SOUTH
2004

Date		Temperature			Relative Humidity	Dew Point	Precipitation Total	Wind			Solar Radiation	ASCE Calculation		Calculation Pan
Month	Day	Max. (°F)	Min. (°F)	Average (°F)	Average (%)	Average (°F)	(inch)	Max (mph)	Total (miles)	Average (mph)	Total (Langl)	ET_r Alfalfa (inch)	ET_o Grass (inch)	(Kp)
4	26	66.8	34.5	52.6	59.3	37.0		15.2	95.9	4.0	626.3	0.19	0.16	0.84
4	27	77.7	36.4	59.7	41.9	31.8		31.7	179.3	7.5	637.3	0.32	0.24	0.80
4	28	76.5	43.3	60.9	32.8	29.7		37.1	154.2	6.4	449.4	0.29	0.21	0.75
4	29	45.0	31.7	35.9	86.9	32.3	0.05	17.8	109.1	4.5	115.1	0.06	0.04	0.79
4	30	35.3	31.0	32.7	98.0	32.1	0.38	18.0	65.0	2.7	109.8	0.03	0.03	0.86
5	1	60.8	29.5	45.5	63.1	32.3		12.7	71.7	3.0	631.2	0.16	0.14	0.86
5	2	70.2	32.8	54.1	51.6	34.5		16.9	94.6	3.9	630.2	0.21	0.17	0.84
5	3	79.7	42.0	63.6	41.1	36.5		20.4	119.0	5.0	592.0	0.28	0.21	0.81
5	4	78.7	48.6	62.4	48.0	41.5		21.8	140.2	5.8	600.4	0.29	0.22	0.78
5	5	85.9	46.8	68.6	34.8	36.9		20.4	141.0	5.9	662.8	0.35	0.26	0.77
5	6	86.1	48.6	69.5	28.5	32.4		16.1	92.2	3.8	596.5	0.29	0.22	0.75
5	7	83.0	44.7	65.8	46.5	40.8		16.2	100.7	4.2	656.0	0.28	0.22	0.78
5	8	82.1	45.1	65.9	32.9	33.2		16.9	99.4	4.1	617.0	0.28	0.22	0.79
5	9	82.1	44.3	65.8	32.6	33.6		16.3	104.1	4.3	510.5	0.27	0.20	0.77
5	10	79.8	42.8	63.2	49.8	44.1		32.1	163.7	6.8	606.5	0.29	0.22	0.78
5	11	84.5	51.7	66.3	37.0	37.0		41.2	187.1	7.8	539.9	0.39	0.27	0.76
5	12	54.5	33.6	43.2	72.9	34.2	0.68	22.0	108.3	4.5	173.8	0.09	0.07	0.78
5	13	42.3	33.2	37.9	90.0	35.2	0.15	11.5	99.2	4.1	164.4	0.05	0.04	0.84
5	14	62.9	37.9	49.0	70.9	39.1		16.9	57.8	2.4	569.6	0.16	0.14	0.86
5	15	68.2	38.9	54.9	62.5	41.3		27.4	113.3	4.7	526.8	0.19	0.16	0.85
5	16	77.3	40.8	60.7	53.6	40.4		30.6	162.6	6.8	628.7	0.29	0.22	0.81
5	17	68.6	46.7	59.3	66.6	47.7		19.9	137.6	5.7	451.6	0.18	0.14	0.81
5	18	71.7	53.0	61.1	78.1	53.7		15.7	109.2	4.5	480.9	0.17	0.15	0.83
5	19	80.6	45.3	63.5	62.1	47.7		22.6	107.4	4.5	587.8	0.25	0.20	0.83
5	20	72.5	52.2	62.3	62.8	49.3		16.5	124.0	5.2	517.8	0.21	0.17	0.82
5	21	79.1	50.1	64.8	57.2	46.6		26.0	117.6	4.9	586.6	0.26	0.21	0.81
5	22	68.0	49.2	58.2	57.0	42.7	0.03	28.0	126.4	5.3	372.2	0.19	0.14	0.80
5	23	77.2	38.6	60.5	50.3	38.3		17.8	102.9	4.3	618.7	0.25	0.20	0.81
5	24	67.8	42.7	55.5	60.8	41.7	0.17	18.1	119.8	5.0	512.9	0.19	0.16	0.82

TABLE B6
NCWCD WEATHER STATION DATA
LONGMONT SOUTH
2004

Date		Temperature			Relative Humidity	Dew Point	Precipitation Total	Wind			Solar Radiation	ASCE Calculation		Calculation Pan
Month	Day	Max. (°F)	Min. (°F)	Average (°F)	Average (%)	Average (°F)	(inch)	Max (mph)	Total (miles)	Average (mph)	Total (Langl)	ET_r Alfalfa (inch)	ET_o Grass (inch)	(Kp)
5	25	61.1	42.7	49.2	79.0	43.0		16.1	97.1	4.0	364.9	0.13	0.11	0.83
5	26	75.6	39.8	59.4	55.6	39.6		27.6	136.8	5.7	694.4	0.28	0.22	0.82
5	27	76.9	51.2	65.0	40.6	39.9		25.6	125.6	5.2	445.7	0.25	0.19	0.79
5	28	85.3	48.7	66.5	45.4	42.5		22.2	91.1	3.8	497.7	0.26	0.20	0.79
5	29	72.8	45.0	58.2	60.0	43.3	0.09	30.4	137.3	5.7	402.9	0.21	0.16	0.80
5	30	62.6	38.0	52.0	41.3	27.6		41.6	276.4	11.5	673.0	0.29	0.21	0.75
5	31	71.7	41.7	59.1	32.7	28.4		34.4	205.9	8.6	668.1	0.33	0.24	0.71
6	1	74.8	36.9	58.8	43.4	35.2		17.1	109.4	4.6	638.4	0.25	0.20	0.76
6	2	74.3	45.1	58.5	59.9	43.8	0.03	18.1	94.2	3.9	461.1	0.20	0.16	0.82
6	3	82.7	45.2	64.6	56.0	46.6		25.1	117.9	4.9	453.7	0.25	0.19	0.82
6	4	83.7	47.5	67.3	45.1	44.4		26.4	99.1	4.1	473.3	0.25	0.19	0.81
6	5	80.9	50.5	67.9	47.7	46.6		13.5	80.0	3.3	613.2	0.25	0.21	0.81
6	6	91.5	48.2	71.7	43.1	44.4		24.8	104.2	4.3	544.9	0.31	0.23	0.81
6	7	94.3	51.0	77.3	26.8	37.4		28.3	139.9	5.8	643.5	0.40	0.29	0.77
6	8	78.2	56.8	68.3	56.5	51.8	0.28	26.2	141.6	5.9	595.9	0.26	0.21	0.77
6	9	68.5	54.9	61.6	82.8	56.3	0.01	18.5	115.1	4.8	354.3	0.13	0.11	0.82
6	10	76.6	49.9	62.8	57.5	44.7		37.7	154.9	6.5	470.7	0.26	0.19	0.81
6	11	73.5	48.0	62.8	30.1	30.6		39.9	232.0	9.7	673.4	0.37	0.27	0.74
6	12	74.7	47.1	59.9	48.6	39.8		38.3	121.5	5.1	327.9	0.22	0.16	0.74
6	13	86.6	43.2	65.9	50.4	42.9		25.3	109.1	4.5	635.7	0.31	0.24	0.80
6	14	83.2	51.7	68.2	46.3	46.3	0.02	28.8	102.3	4.3	596.2	0.27	0.22	0.81
6	15	84.7	47.4	68.0	51.8	47.6	0.01	30.3	129.3	5.4	550.8	0.28	0.22	0.81
6	16	63.1	48.9	53.7	88.3	50.1	0.13	21.6	109.4	4.6	69.7	0.07	0.05	0.83
6	17	55.4	50.1	52.4	96.2	51.4	0.41	11.9	77.6	3.2	111.6	0.04	0.04	0.86
6	18	53.1	42.2	48.3	96.3	47.4	0.48	16.7	125.6	5.2	97.9	0.04	0.03	0.85
6	19	66.8	42.3	52.2	88.4	49.2	0.04	17.7	97.2	4.0	380.7	0.13	0.11	0.85
6	20	75.5	53.7	60.7	77.7	53.1	0.07	25.1	103.0	4.3	464.8	0.19	0.16	0.84
6	21	58.2	46.4	52.2	84.4	47.6	0.32	19.2	92.0	3.8	230.7	0.08	0.07	0.85
6	22	75.3	39.1	58.9	56.8	40.3		11.3	69.0	2.9	731.1	0.24	0.20	0.85

TABLE B6
NCWCD WEATHER STATION DATA
LONGMONT SOUTH
2004

Date		Temperature			Relative Humidity	Dew Point	Precipitation Total	Wind			Solar Radiation	ASCE Calculation		Calculation Pan
Month	Day	Max. (°F)	Min. (°F)	Average (°F)	Average (%)	Average (°F)	(inch)	Max (mph)	Total (miles)	Average (mph)	Total (Langl)	ET_r Alfalfa (inch)	ET_o Grass (inch)	(Kp)
6	23	80.0	46.7	64.1	55.7	46.6		11.8	82.8	3.5	701.5	0.26	0.22	0.84
6	24	70.5	49.0	62.6	58.4	47.7		18.3	112.2	4.7	543.6	0.20	0.17	0.83
6	25	73.7	47.9	60.6	74.9	52.2	0.10	24.2	93.4	3.9	491.5	0.18	0.15	0.84
6	26	71.3	50.5	60.2	82.5	54.6	0.06	14.8	71.3	3.0	450.6	0.15	0.13	0.86
6	27	70.3	48.1	58.9	82.9	53.3	0.38	19.0	106.7	4.4	471.0	0.16	0.14	0.86
6	28	73.3	51.1	60.9	80.5	54.3		12.2	79.8	3.3	491.5	0.17	0.15	0.86
6	29	79.8	50.6	64.2	72.1	54.0	0.19	23.3	101.3	4.2	578.1	0.22	0.19	0.85
6	30	73.9	52.9	62.2	76.1	54.3	0.01	22.6	105.9	4.4	415.6	0.17	0.14	0.84
7	1	79.1	51.6	65.8	68.0	53.8		27.0	84.0	3.5	656.7	0.23	0.20	0.85
7	2	83.9	49.9	67.7	61.6	52.5		16.2	81.7	3.4	575.0	0.23	0.20	0.85
7	3	85.9	49.8	67.6	53.5	47.6		16.4	95.7	4.0	545.2	0.27	0.21	0.83
7	4	84.6	49.6	67.7	47.8	46.0	0.01	18.6	95.4	4.0	558.5	0.26	0.21	0.81
7	5	83.3	50.3	65.6	59.0	49.3		37.1	141.5	5.9	492.2	0.28	0.21	0.81
7	6	78.3	51.9	65.4	58.0	49.3	0.01	16.3	80.8	3.4	676.4	0.24	0.21	0.82
7	7	94.6	47.3	74.1	41.3	42.6		33.2	164.5	6.9	660.7	0.42	0.31	0.80
7	8	95.6	52.9	76.8	33.3	42.0		15.9	93.3	3.9	682.8	0.34	0.27	0.77
7	9	90.1	55.6	72.3	45.6	48.0		36.6	130.4	5.4	470.1	0.32	0.23	0.78
7	10	86.7	59.0	71.6	54.1	52.3		28.9	119.5	5.0	568.3	0.30	0.23	0.79
7	11	94.6	52.6	75.6	43.1	46.9		12.9	84.0	3.5	690.6	0.32	0.26	0.80
7	12	96.0	54.0	78.8	35.1	45.1		16.7	115.5	4.8	679.1	0.37	0.28	0.79
7	13	97.9	59.5	79.6	38.5	48.5		19.1	109.2	4.5	590.4	0.35	0.27	0.77
7	14	84.7	66.1	74.8	55.2	57.2		29.5	148.3	6.2	468.1	0.28	0.21	0.78
7	15	91.9	59.1	74.1	52.8	53.8	0.06	26.4	134.8	5.6	536.7	0.33	0.25	0.79
7	16	75.1	60.8	65.7	84.9	60.7	0.50	17.8	77.5	3.2	272.0	0.12	0.10	0.82
7	17	79.7	58.0	67.2	78.0	59.4		14.1	86.2	3.6	456.2	0.18	0.16	0.86
7	18	88.1	54.2	72.4	58.2	54.3		12.3	59.8	2.5	576.8	0.23	0.20	0.85
7	19	87.7	58.5	73.7	56.6	56.1		18.4	88.2	3.7	440.4	0.23	0.18	0.84
7	20	89.7	58.4	72.9	54.9	54.5	0.01	28.6	128.6	5.4	390.6	0.27	0.20	0.81
7	21	89.7	54.9	72.3	52.8	52.3	0.01	25.1	106.7	4.4	485.5	0.27	0.21	0.80

TABLE B6
NCWCD WEATHER STATION DATA
LONGMONT SOUTH
2004

Date		Temperature			Relative Humidity	Dew Point	Precipitation	Wind			Solar Radiation	ASCE Calculation		Calculation Pan
Month	Day	Max. (°F)	Min. (°F)	Average (°F)	Average (%)	Average (°F)	Total (inch)	Max (mph)	Total (miles)	Average (mph)	Total (Langl)	ET_r Alfalfa (inch)	ET_o Grass (inch)	(Kp)
7	22	72.7	54.7	61.9	81.2	55.9	0.48	35.9	130.7	5.4	307.4	0.14	0.12	0.82
7	23	62.4	50.5	57.6	94.1	56.0	1.01	20.2	88.5	3.7	108.1	0.04	0.04	0.85
7	24	61.2	49.5	54.5	89.8	51.5	0.05	13.2	89.6	3.7	219.6	0.08	0.07	0.86
7	25	74.5	54.7	62.4	77.0	54.2		10.7	63.7	2.7	551.5	0.18	0.16	0.86
7	26	82.5	49.9	65.6	66.9	53.0		24.7	109.9	4.6	511.2	0.23	0.19	0.85
7	27	77.7	52.2	65.4	66.3	53.4		15.8	95.8	4.0	345.1	0.17	0.14	0.84
7	28	76.0	53.5	62.7	76.5	54.6	0.04	20.8	92.4	3.9	428.0	0.17	0.14	0.84
7	29	85.3	50.9	66.8	62.5	52.2	0.04	26.6	89.5	3.7	602.9	0.25	0.21	0.84
7	30	81.8	50.2	67.6	55.3	49.7	0.01	32.1	126.2	5.3	502.3	0.25	0.19	0.82
7	31	92.6	54.2	74.0	39.9	47.2		17.6	99.1	4.1	492.1	0.29	0.22	0.80
8	1	92.0	50.7	72.7	45.9	48.3		36.5	115.8	4.8	506.9	0.30	0.23	0.80
8	2	87.0	55.2	71.9	50.5	51.9		25.1	106.6	4.4	417.3	0.24	0.19	0.81
8	3	89.7	62.4	74.3	48.8	52.5		13.9	84.6	3.5	543.6	0.27	0.22	0.81
8	4	87.9	57.0	71.4	59.2	55.9		21.0	97.8	4.1	559.6	0.26	0.21	0.81
8	5	78.6	56.2	66.7	72.7	57.3	0.02	27.8	111.1	4.6	313.0	0.16	0.13	0.83
8	6	86.4	52.4	68.3	67.7	55.6	0.09	43.6	101.5	4.2	516.0	0.24	0.19	0.84
8	7	89.4	51.8	68.6	62.5	53.0		15.9	93.7	3.9	482.4	0.25	0.19	0.83
8	8	79.3	53.5	67.8	58.1	51.9		17.0	84.6	3.5	591.4	0.22	0.19	0.83
8	9	76.2	55.2	65.1	71.0	55.2		16.9	130.2	5.4	518.8	0.21	0.17	0.83
8	10	81.5	54.1	65.2	77.4	57.3	0.40	28.7	96.4	4.0	514.7	0.21	0.17	0.83
8	11	71.5	54.2	61.6	82.0	55.7	0.13	12.0	58.1	2.4	364.4	0.13	0.11	0.86
8	12	76.3	48.5	62.9	59.1	46.8		12.3	61.9	2.6	593.5	0.20	0.17	0.86
8	13	79.1	46.4	63.2	59.5	46.9		11.7	80.6	3.4	602.3	0.22	0.19	0.84
8	14	82.9	50.6	66.8	59.5	50.2		14.9	84.8	3.5	558.8	0.23	0.19	0.83
8	15	86.0	54.5	68.1	61.5	52.7		14.1	87.3	3.6	544.9	0.24	0.19	0.83
8	16	86.4	51.4	70.1	49.2	47.5		14.0	82.8	3.5	578.4	0.25	0.20	0.82
8	17	87.0	53.3	68.9	54.4	50.0	0.01	33.7	101.4	4.2	426.0	0.24	0.18	0.81
8	18	73.5	54.5	61.5	74.6	52.7	0.87	24.8	153.6	6.4	220.2	0.16	0.12	0.81
8	19	64.1	52.3	57.2	84.2	52.2	0.26	17.0	87.1	3.6	206.1	0.09	0.08	0.83

TABLE B6
NCWCD WEATHER STATION DATA
LONGMONT SOUTH
2004

Date		Temperature			Relative Humidity	Dew Point	Precipitation Total	Wind			Solar Radiation	ASCE Calculation		Calculation Pan
Month	Day	Max. (°F)	Min. (°F)	Average (°F)	Average (%)	Average (°F)	(inch)	Max (mph)	Total (miles)	Average (mph)	Total (Langl)	ET_r Alfalfa (inch)	ET_o Grass (inch)	(Kp)
8	20	74.7	47.1	59.8	75.3	50.9	0.07	24.0	89.3	3.7	360.9	0.15	0.12	0.85
8	21	81.8	48.5	64.2	67.6	51.9		11.0	68.0	2.8	452.9	0.18	0.15	0.85
8	22	83.1	51.9	65.3	63.4	51.0		35.9	109.5	4.6	417.1	0.22	0.17	0.84
8	23	82.4	50.0	66.3	54.4	46.0		33.5	174.3	7.3	481.0	0.29	0.21	0.80
8	24	78.7	52.1	64.0	60.8	49.1	0.03	22.9	93.2	3.9	408.8	0.19	0.15	0.80
8	25	84.1	50.9	67.9	46.3	43.8		25.1	158.7	6.6	368.1	0.29	0.20	0.80
8	26	76.1	49.9	62.4	59.4	47.3	0.01	23.2	144.1	6.0	392.6	0.21	0.16	0.78
8	27	57.7	48.3	53.2	88.0	49.7	0.30	13.1	92.9	3.9	140.0	0.06	0.05	0.83
8	28	73.5	40.1	57.7	65.0	43.4		13.1	72.6	3.0	539.2	0.18	0.15	0.85
8	29	79.2	42.2	63.1	53.2	43.3		13.2	80.8	3.4	548.1	0.21	0.17	0.84
8	30	85.4	46.5	65.6	51.2	44.6		22.9	82.4	3.4	510.5	0.23	0.18	0.83
8	31	83.4	48.6	66.7	50.1	45.4		18.5	104.9	4.4	531.6	0.25	0.19	0.81
9	1	84.2	47.9	66.5	50.8	44.6		14.7	89.1	3.7	516.5	0.23	0.18	0.81
9	2	89.5	45.3	68.1	46.9	44.4		27.0	112.2	4.7	418.3	0.27	0.19	0.81
9	3	79.8	48.7	66.5	50.2	47.1		20.8	102.7	4.3	472.7	0.21	0.17	0.81
9	4	68.6	49.5	60.8	74.7	52.6	0.68	17.6	80.5	3.4	249.4	0.10	0.09	0.84
9	5	69.8	46.9	58.9	57.7	42.7		30.2	168.3	7.0	506.5	0.22	0.16	0.82
9	6	78.7	43.7	60.9	54.0	42.6		15.0	81.2	3.4	521.4	0.20	0.16	0.81
9	7	81.0	45.2	63.3	56.7	45.9		12.0	72.9	3.0	522.2	0.20	0.16	0.83
9	8	85.3	47.3	67.4	45.5	42.8		17.9	77.1	3.2	443.7	0.21	0.16	0.83
9	9	86.0	45.7	67.9	44.7	42.6		25.4	117.7	4.9	418.5	0.25	0.18	0.81
9	10	77.2	52.4	65.3	50.6	45.8	0.02	33.3	121.2	5.0	277.9	0.19	0.14	0.80
9	11	85.2	47.1	66.8	50.4	44.6		15.5	84.8	3.5	498.2	0.22	0.17	0.81
9	12	87.8	49.1	68.1	48.6	46.2	0.01	23.1	81.6	3.4	385.7	0.21	0.16	0.82
9	13	79.3	58.5	67.8	52.6	49.8		20.7	146.5	6.1	449.3	0.24	0.18	0.80
9	14	77.1	50.4	62.3	63.7	49.2		24.4	122.4	5.1	383.8	0.19	0.14	0.80
9	15	73.1	39.1	57.2	41.6	32.8		18.5	127.6	5.3	493.6	0.23	0.17	0.80
9	16	84.5	37.0	62.6	43.1	35.7		29.8	114.8	4.8	487.1	0.26	0.19	0.79
9	17	88.4	42.7	66.9	38.9	37.4		14.2	90.3	3.8	485.9	0.25	0.18	0.80

TABLE B6
NCWCD WEATHER STATION DATA
LONGMONT SOUTH
2004

Date		Temperature			Relative Humidity	Dew Point	Precipitation Total	Wind			Solar Radiation	ASCE Calculation		Calculation Pan
Month	Day	Max. (°F)	Min. (°F)	Average (°F)	Average (%)	Average (°F)	(inch)	Max (mph)	Total (miles)	Average (mph)	Total (Langl)	ET_r Alfalfa (inch)	ET_o Grass (inch)	(Kp)
9	18	89.5	44.0	68.8	38.0	38.6		28.1	143.1	6.0	460.2	0.31	0.22	0.78
9	19	83.1	56.3	67.2	49.2	46.4		33.4	156.2	6.5	252.3	0.26	0.17	0.77
9	20	77.9	46.4	63.0	57.5	46.3		23.7	143.2	6.0	447.3	0.22	0.16	0.78
9	21	53.7	40.5	43.8	88.5	40.5	0.84	20.1	110.1	4.6	69.9	0.06	0.05	0.82
9	22	55.1	39.7	45.3	80.5	39.3	0.03	18.6	66.9	2.8	359.1	0.09	0.08	0.85
9	23	69.3	34.1	52.0	58.4	36.6		31.4	177.9	7.4	472.1	0.21	0.15	0.83
9	24	69.8	41.3	55.6	61.3	41.1		11.8	69.3	2.9	425.8	0.14	0.11	0.82
9	25	71.4	41.3	55.2	69.4	44.6		23.0	89.0	3.7	428.3	0.15	0.12	0.85
9	26	77.1	41.5	58.5	61.0	42.4		12.9	70.2	2.9	445.0	0.16	0.13	0.84
9	27	70.8	43.5	56.8	65.4	44.3	0.43	22.0	117.9	4.9	358.7	0.16	0.12	0.83
9	28	61.4	45.8	52.5	82.3	47.1		15.3	80.2	3.3	233.2	0.08	0.07	0.84
9	29	71.7	40.2	55.4	73.8	46.4		18.7	83.3	3.5	372.2	0.13	0.10	0.86
9	30	57.0	49.1	52.5	83.4	47.6	0.28	18.1	102.4	4.3	201.4	0.07	0.06	0.86
10	1	50.4	39.2	45.1	90.2	42.5	0.28	15.1	59.9	2.5	51.2	0.03	0.03	0.86
10	2	72.3	33.7	52.5	69.2	40.8		21.8	84.6	3.5	375.5	0.14	0.11	0.87
10	3	71.4	43.3	57.4	56.4	40.6		13.4	94.7	3.9	380.3	0.16	0.12	0.84
10	4	66.5	39.5	53.3	69.3	42.9		11.6	76.2	3.2	341.8	0.11	0.09	0.84
10	5	63.8	38.6	51.9	74.3	43.7		15.1	77.4	3.2	321.5	0.09	0.08	0.86
10	6	56.4	43.9	51.4	84.9	47.0	0.14	19.2	147.2	6.1	163.5	0.06	0.05	0.85
10	7	74.1	44.7	59.4	48.0	37.9		11.8	78.5	3.3	390.7	0.16	0.12	0.82
10	8	68.8	40.6	54.7	54.2	36.9		14.3	83.6	3.5	402.0	0.14	0.11	0.81
10	9	74.9	36.5	54.4	57.7	37.5		12.8	69.4	2.9	404.6	0.15	0.11	0.83
10	10	66.9	36.5	52.6	59.5	37.7		13.7	76.2	3.2	377.4	0.12	0.09	0.84
10	11	59.9	39.7	49.4	74.5	41.2		15.9	78.6	3.3	270.7	0.09	0.07	0.85
10	12	69.2	37.7	52.1	65.0	38.3	0.09	30.0	78.4	3.3	404.2	0.13	0.10	0.85
10	13	51.3	35.8	44.9	68.7	34.8	0.24	22.5	108.2	4.5	403.0	0.09	0.07	0.84
10	14	69.5	31.3	49.5	66.3	36.9		24.0	92.6	3.9	236.3	0.13	0.09	0.84
10	15	56.3	35.9	41.9	86.3	38.0		24.5	92.4	3.9	122.8	0.07	0.05	0.85
10	16	66.1	30.1	45.6	78.9	38.7		16.1	69.6	2.9	265.0	0.09	0.07	0.86

TABLE B6
NCWCD WEATHER STATION DATA
LONGMONT SOUTH
2004

Date		Temperature			Relative Humidity	Dew Point	Precipitation Total	Wind			Solar Radiation	ASCE Calculation		Calculation Pan
Month	Day	Max. (°F)	Min. (°F)	Average (°F)	Average (%)	Average (°F)	(inch)	Max (mph)	Total (miles)	Average (mph)	Total (Langl)	ET_r Alfalfa (inch)	ET_o Grass (inch)	(Kp)
10	17	73.2	44.3	58.9	38.6	32.0		36.5	125.1	5.2	233.9	0.19	0.13	0.81
10	18	69.2	35.5	53.0	54.5	34.3		33.0	186.5	7.8	374.3	0.20	0.13	0.77
10	19	61.1	39.9	50.3	56.0	34.6		13.2	94.2	3.9	303.0	0.11	0.08	0.80
10	20	67.7	38.2	51.3	63.6	38.3		10.7	82.3	3.4	330.0	0.12	0.09	0.83
10	21	66.8	34.3	50.0	69.6	39.8		12.4	82.0	3.4	345.3	0.11	0.08	0.85
10	22	60.1	33.5	45.5	57.7	29.7		39.8	181.5	7.6	202.4	0.15	0.10	0.81
10	23	68.9	34.7	48.7	43.4	26.4		18.1	100.0	4.2	343.7	0.16	0.11	0.78
10	24	63.3	40.6	51.5	47.6	31.1	0.01	27.6	201.1	8.4	211.3	0.19	0.12	0.76
10	25	52.9	30.1	41.6	79.4	35.3		15.0	73.1	3.0	276.8	0.06	0.05	0.81
10	26	63.3	31.5	46.5	68.9	36.0		13.3	83.8	3.5	308.1	0.10	0.07	0.86
10	27	56.8	33.5	45.7	76.7	38.8		11.8	76.2	3.2	300.1	0.07	0.05	0.86
10	28	67.7	34.5	50.9	66.5	39.0	0.01	13.9	99.9	4.2	324.1	0.12	0.08	0.85
10	29	55.2	40.1	49.5	30.6	19.7		49.2	424.4	17.7	284.6	0.26	0.16	0.72
10	30	59.7	28.2	44.4	39.9	20.0		32.8	147.4	6.1	338.6	0.16	0.10	0.68
10	31	55.7	28.0	39.9	58.4	25.0	0.19	23.4	111.3	4.6	228.1	0.11	0.07	0.79
11	1	40.6	24.4	33.1	67.4	23.2	0.09	29.2	124.2	5.2	218.4			
11	2	53.0	17.2	34.5	55.9	18.4		12.0	86.6	3.6	331.3			
11	3	63.4	25.5	43.7	52.9	25.2		11.0	59.4	2.5	322.6			
11	4	49.4	29.7	38.3	73.7	30.5		10.2	59.5	2.5	160.5			
11	5	74.1	29.4	50.0	43.8	24.2		14.8	108.3	4.5	332.8			
11	6	75.2	38.7	54.9	25.4	17.7		23.5	116.7	4.9	215.4			
11	7	67.5	28.1	47.4	41.4	22.7		10.7	78.8	3.3	309.0			
11	8	66.5	34.0	49.4	43.6	26.1		8.7	62.0	2.6	229.3			
11	9	61.1	37.8	49.4	52.5	32.1		23.2	104.2	4.3	203.3			
11	10	51.9	30.6	42.1	71.4	32.6	0.23	29.7	160.3	6.7	38.3			
11	11	42.6	27.2	34.6	78.5	28.5		9.3	56.9	2.4	184.5			
11	12	44.9	30.3	37.0	74.9	29.6		11.0	45.7	1.9	223.1			
11	13	41.2	28.0	33.4	84.9	29.3		11.8	75.8	3.2	123.0			
11	14	45.6	30.2	35.8	82.4	30.8	0.01	12.3	75.9	3.2	156.3			

TABLE B6
NCWCD WEATHER STATION DATA
LONGMONT SOUTH
2004

Date		Temperature			Relative Humidity	Dew Point	Precipitation Total	Wind			Solar Radiation	ASCE Calculation		Calculation Pan
Month	Day	Max. (°F)	Min. (°F)	Average (°F)	Average (%)	Average (°F)	(inch)	Max (mph)	Total (miles)	Average (mph)	Total (Langl)	ET_r Alfalfa (inch)	ET_o Grass (inch)	(Kp)
11	15	57.6	25.0	39.0	70.2	29.1		7.4	53.4	2.2	276.7			
11	16	64.3	28.4	44.9	56.4	28.0		11.8	69.5	2.9	245.6			
11	17	56.0	34.5	46.1	55.5	30.5		8.1	51.1	2.1	128.5			
11	18	52.8	30.0	42.1	60.4	28.6		11.5	55.0	2.3	220.6			
11	19	51.4	24.6	37.2	68.7	26.9	0.01	17.3	79.5	3.3	254.8			
11	20	34.5	27.0	29.7	89.5	27.0	0.22	15.2	33.8	1.4	32.8			
11	21	32.4	15.0	26.7	86.1	23.2		11.0	70.2	2.9	161.3			
11	22	55.3	18.0	35.1	71.2	26.6		10.2	64.8	2.7	250.3			
11	23	39.0	30.3	34.6	70.7	26.0		9.9	57.1	2.4	140.0			
11	24	45.5	22.9	34.3	66.2	23.4		28.9	100.2	4.2	169.2			
11	25	61.9	31.4	47.0	42.3	23.5		33.0	227.1	9.5	161.5			
11	26	46.2	25.1	36.5	70.5	28.1	0.09	18.7	101.1	4.2	125.2			
11	27	34.7	23.2	28.1	82.1	23.2	0.17	14.6	115.3	4.8	140.2			
11	28	27.3	18.2	22.9	91.2	20.9	0.27	15.6	34.9	1.5	118.7			
11	29	38.6	-3.3	16.2	79.6	11.7	0.04	10.1	47.3	2.0	219.1			
11	30	38.7	-5.5	14.6	74.0	8.2		13.2	46.1	1.9	247.6			
12	1	44.7	7.8	19.1	67.5	9.4		13.2	66.1	2.8	218.8			
12	2	39.5	1.5	15.7	72.5	8.0		10.8	66.1	2.8	241.6			
12	3	48.6	5.2	23.5	63.6	12.0		15.1	73.4	3.1	241.9			
12	4	46.7	13.5	29.1	65.5	18.9		11.3	86.8	3.6	239.8			
12	5	44.6	23.3	32.3	64.5	21.3		15.2	78.8	3.3	196.4			
12	6	47.0	19.0	32.1	53.5	16.5		31.3	122.0	5.1	222.0			
12	7	46.9	19.5	30.5	58.3	17.6		13.2	94.4	3.9	238.5			
12	8	57.3	24.3	39.7	43.5	18.2		24.6	109.5	4.6	217.8			
12	9	55.1	33.0	41.4	56.1	26.5		21.4	146.7	6.1	181.2			
12	10	56.0	26.6	44.4	52.2	27.2		34.0	238.4	9.9	226.4			
12	11	66.7	36.6	55.3	31.7	23.9		40.0	299.8	12.5	114.4			
12	12	60.3	28.2	38.4	57.0	23.2	0.01	30.8	114.2	4.8	96.3			
12	13	41.3	24.3	31.8	58.0	18.0		8.3	52.1	2.2	157.8			

TABLE B6
NCWCD WEATHER STATION DATA
LONGMONT SOUTH
2004

Date		Temperature			Relative Humidity	Dew Point	Precipitation Total	Wind			Solar Radiation	ASCE Calculation		Calculation Pan
Month	Day	Max. (°F)	Min. (°F)	Average (°F)	Average (%)	Average (°F)	(inch)	Max (mph)	Total (miles)	Average (mph)	Total (Langl)	ET_r Alfalfa (inch)	ET_o Grass (inch)	(Kp)
12	14	49.7	21.1	32.6	67.6	22.6		9.1	48.0	2.0	183.6			
12	15	49.0	29.4	37.7	66.3	26.8	0.03	19.1	101.3	4.2	158.2			
12	16	48.1	23.8	35.9	62.8	23.2	0.01	15.9	101.3	4.2	229.8			
12	17	47.9	20.0	32.5	58.2	18.4		13.4	69.0	2.9	142.6			
12	18	48.6	23.0	34.1	56.5	19.0		14.3	77.0	3.2	190.9			
12	19	64.5	20.6	42.6	44.2	18.4		45.3	171.8	7.2	225.9			
12	20	57.0	26.9	45.2	32.8	12.7		66.7	428.4	17.9	195.8			
12	21	35.9	18.1	26.6	63.8	15.1		17.6	89.1	3.7	222.2			
12	22	28.6	16.2	21.5	82.4	16.8	0.08	18.2	80.2	3.3	155.5			
12	23	17.6	-8.1	5.3	75.0	0.2	0.05	19.4	96.1	4.0	178.0			
12	24	46.3	-6.8	23.0	63.1	13.7		19.4	76.9	3.2	210.9			
12	25	50.3	23.3	39.5	51.2	22.3		24.0	167.8	7.0	216.9			
12	26	43.1	20.6	30.9	71.6	22.5		9.5	55.5	2.3	104.7			
12	27	50.8	29.1	36.8	58.7	22.9		9.5	52.6	2.2	114.3			
12	28	57.0	27.2	41.6	51.2	23.4		13.7	92.8	3.9	220.7			
12	29	47.0	24.8	33.4	71.2	24.9		11.0	63.9	2.7	121.0			
12	30	51.8	32.8	44.8	34.3	17.6		43.6	337.2	14.1	231.3			
12	31	53.4	28.5	40	41	17.3		27	115	4.8	174.8			
							17.09						**36.92**	

TABLE B7
NCWCD WEATHER STATION DATA
LONGMONT SOUTH
2003

Date		Temperature			Relative Humidity	Dew Point	Precipitation Total	Wind			Solar Radiation	ASCE Calculation	
Month	Day	Max. (°F)	Min. (°F)	Average (°F)	Average (%)	Average (°F)	(inch)	Max (mph)	Total (miles)	Average (mph)	Total (Langl)	ET_r Alfalfa (inch)	ET_o Grass (inch)
1	1	46.4	16.6	35.1	58.0	21.2		31.0	206.1	8.6	126.7		
1	2	55.3	16.4	36.2	44.5	14.1		27.4	120.9	5.0	203.6		
1	3	60.3	43.3	53.0	31.9	23.7		40.7	363.6	15.2	105.7		
1	4	53.0	29.0	40.8	54.4	24.7		33.2	130.9	5.5	120.9		
1	5	52.3	29.5	44.0	52.0	26.5		27.4	145.1	6.0	97.3		
1	6	50.3	23.2	37.4	73.8	29.2		11.7	76.0	3.2	223.2		
1	7	67.3	19.4	41.3	46.5	17.1		13.7	90.0	3.8	234.1		
1	8	67.7	26.3	44.5	33.6	15.3		11.3	78.5	3.3	235.7		
1	9	36.9	14.8	27.7	44.0	8.3		18.9	72.9	3.0	206.4		
1	10	27.6	9.6	17.1	61.8	6.0		10.1	74.2	3.1	134.3		
1	11	39.1	10.0	24.1	62.1	12.4		11.3	70.5	2.9	163.1		
1	12	51.7	11.8	30.3	57.8	15.7		10.1	77.3	3.2	235.7		
1	13	62.9	19.7	43.7	40.1	18.6	0.01	39.8	211.9	8.8	159.2		
1	14	56.9	22.0	35.5	62.9	23.1		8.4	62.9	2.6	235.1		
1	15	53.6	20.3	31.8	60.1	18.1		38.8	243.8	10.2	191.5		
1	16	41.5	12.5	27.6	50.8	9.7		16.7	96.7	4.0	221.1		
1	17	43.9	16.6	30.3	52.0	13.1		12.2	81.4	3.4	231.4		
1	18	44.9	13.6	27.8	49.7	10.6		17.0	116.5	4.9	240.2		
1	19	65.9	22.0	50.4	18.1	6.5		42.5	337.4	14.1	211.1		
1	20	63.5	27.7	47.8	18.7	5.4		31.4	171.7	7.2	182.4		
1	21	43.9	16.5	29.2	69.1	19.9		11.5	66.8	2.8	142.9		
1	22	23.9	11.9	15.8	94.0	14.7		14.8	104.5	4.4	50.5		
1	23	54.6	12.3	25.5	80.1	19.9		24.3	77.2	3.2	226.1		
1	24	51.7	20.0	33.6	70.6	24.3		13.6	87.7	3.7	205.5		
1	25	53.1	18.8	37.0	56.2	20.7		24.3	132.1	5.5	262.4		
1	26	60.9	16.8	43.0	42.5	19.4		36.6	261.3	10.9	242.6		
1	27	68.4	46.6	58.3	25.9	22.9		38.9	259.8	10.8	198.6		
1	28	50.9	23.9	39.0	64.6	27.5		19.6	101.6	4.2	76.5		
1	29	51.4	20.1	36.0	66.2	24.1		25.1	95.8	4.0	244.2		

TABLE B7
NCWCD WEATHER STATION DATA
LONGMONT SOUTH
2003

Date		Temperature			Relative Humidity	Dew Point	Precipitation Total	Wind			Solar Radiation	ASCE Calculation	
Month	Day	Max. (°F)	Min. (°F)	Average (°F)	Average (%)	Average (°F)	(inch)	Max (mph)	Total (miles)	Average (mph)	Total (Langl)	ET_r Alfalfa (inch)	ET_o Grass (inch)
1	30	60.1	32.8	50.0	36.9	23.1	0.01	43.2	271.1	11.3	122.3		
1	31	65.0	29.4	47.8	51.3	26.7		30.5	156.4	6.5	196.4		
2	1	71.4	48.7	61.4	17.7	16.7		27.3	189.4	7.9	157.1		
2	2	57.5	25.1	38.0	64.5	24.3	0.06	24.8	231.5	9.6	48.4		
2	3	30.8	14.4	24.9	79.0	19.2		16.2	122.3	5.1	287.3		
2	4	40.1	10.1	24.2	74.4	16.9	0.01	19.4	103.7	4.3	281.1		
2	5	31.4	20.7	24.4	87.3	21.0	0.04	11.5	82.9	3.5	153.8		
2	6	22.0	2.4	14.5	77.6	8.8	0.06	25.6	106.0	4.4	185.1		
2	7	35.1	-4.5	16.1	62.9	4.0		14.8	88.0	3.7	328.7		
2	8	33.4	6.4	21.3	68.0	12.7		19.7	96.3	4.0	297.7		
2	9	36.7	15.8	26.0	61.4	12.9		32.2	169.9	7.1	271.3		
2	10	49.8	26.1	38.0	34.8	11.8		39.2	324.5	13.5	344.1		
2	11	48.5	14.2	30.0	64.7	17.7		23.0	142.0	5.9	254.1		
2	12	52.8	14.2	33.2	58.6	18.1		8.6	66.2	2.8	321.9		
2	13	46.8	29.1	36.7	54.7	21.3		6.4	44.0	1.8	135.5		
2	14	55.3	25.9	39.3	69.9	29.5		26.0	125.0	5.2	161.5		
2	15	35.4	27.7	31.3	90.7	28.9		10.9	76.7	3.2	103.6		
2	16	46.2	18.9	30.9	84.3	26.3	0.01	18.8	62.4	2.6	205.1		
2	17	54.7	31.5	44.1	27.1	10.3	0.03	35.7	239.9	10.0	384.3		
2	18	47.1	26.5	36.0	44.1	15.4		21.2	114.3	4.8	235.7		
2	19	49.4	17.2	33.7	51.9	14.4		16.0	93.7	3.9	377.6		
2	20	51.8	12.9	34.7	39.5	9.9		12.9	92.0	3.8	361.5		
2	21	52.4	23.6	37.6	41.2	14.2	0.01	34.3	151.7	6.3	350.4		
2	22	51.5	15.9	35.6	60.1	21.0	0.04	34.0	181.1	7.5	216.5		
2	23	17.6	1.0	9.4	84.4	5.9	0.01	25.1	173.9	7.2	229.9		
2	24	12.5	-4.3	3.0	79.9	-1.7	0.03	11.0	90.2	3.8	398.9		
2	25	30.6	-4.1	15.4	78.8	11.6	0.01	7.6	61.8	2.6	303.3		
2	26	37.6	14.3	26.7	83.5	22.3	0.10	9.5	65.3	2.7	283.5		
2	27	32.1	23.1	27.3	94.2	25.9	0.12	9.7	61.0	2.5	168.9		

TABLE B7
NCWCD WEATHER STATION DATA
LONGMONT SOUTH
2003

Date		Temperature			Relative Humidity	Dew Point	Precipitation Total	Wind			Solar Radiation	ASCE Calculation	
Month	Day	Max. (°F)	Min. (°F)	Average (°F)	Average (%)	Average (°F)	(inch)	Max (mph)	Total (miles)	Average (mph)	Total (Langl)	ET_r Alfalfa (inch)	ET_o Grass (inch)
2	28	36.3	19.9	26.8	88.8	23.9	0.02	9.0	61.6	2.6	295.7		
3	1	37.3	16.5	26.3	85.2	22.2	0.04	18.4	111.4	4.6	303.6	0.05	0.04
3	2	47.1	21.5	30.7	71.3	22.1	0.01	12.1	74.8	3.1	411.6	0.08	0.06
3	3	54.8	28.1	41.6	36.9	15.6	0.02	30.8	255.5	10.6	419.6	0.21	0.14
3	4	34.0	13.8	18.6	85.7	15.1		20.2	154.0	6.4	157.4	0.06	0.04
3	5	44.4	12.8	28.7	57.0	11.4	0.02	40.8	197.5	8.2	416.2	0.13	0.09
3	6	56.4	35.4	44.1	33.7	16.8		41.5	281.1	11.7	279.3	0.24	0.15
3	7	63.0	30.7	48.1	37.0	19.7		35.3	232.9	9.7	448.9	0.25	0.16
3	8	63.7	29.5	48.7	34.2	18.7		32.4	258.4	10.8	431.2	0.26	0.17
3	9	64.3	25.5	48.9	33.2	16.6		37.6	224.7	9.4	398.1	0.25	0.16
3	10	65.3	26.1	49.2	35.1	18.9		37.9	203.9	8.5	420.6	0.24	0.16
3	11	66.8	38.1	55.6	25.9	20.2	0.01	42.5	382.8	15.9	441.6	0.35	0.22
3	12	69.7	38.7	56.0	26.0	19.9		32.6	200.0	8.3	431.6	0.28	0.19
3	13	76.2	31.9	55.5	26.8	17.6		13.4	94.8	4.0	474.8	0.22	0.15
3	14	77.2	33.1	57.7	25.4	18.8		25.1	131.8	5.5	410.4	0.26	0.17
3	15	70.3	41.1	57.0	20.1	15.1		25.2	130.2	5.4	463.4	0.24	0.17
3	16	63.9	32.5	50.3	34.2	22.5		17.2	110.6	4.6	286.8	0.16	0.12
3	17	48.7	33.0	42.4	83.0	37.5	0.51	35.1	255.2	10.6	76.3	0.05	0.04
3	18	34.1	31.3	32.3	100.3	32.2	0.53	36.1	487.8	20.3	134.0	0.02	0.02
3	19	40.9	27.6	33.5	94.3	31.8	0.22	29.6	265.6	11.1	173.9	0.04	0.03
3	20	45.2	21.2	33.9	81.5	28.7		13.2	68.6	2.9	459.8	0.08	0.07
3	21	57.8	32.4	38.5	82.6	33.3		8.6	77.1	3.2	447.5	0.12	0.09
3	22	54.7	27.9	40.1	67.9	29.7		13.3	84.4	3.5	494.7	0.12	0.10
3	23	66.5	33.5	49.7	52.2	31.0		21.1	129.7	5.4	376.6	0.18	0.13
3	24	46.7	31.7	36.5	89.5	33.4	0.19	19.4	113.3	4.7	130.0	0.06	0.05
3	25	54.3	29.6	41.2	71.8	31.8	0.03	22.4	145.2	6.0	518.5	0.13	0.10
3	26	66.0	35.4	53.8	39.6	27.7	0.05	44.6	256.4	10.7	488.0	0.26	0.18
3	27	44.6	26.8	33.1	59.8	20.0	0.03	44.9	331.6	13.8	250.7	0.14	0.09
3	28	40.9	21.1	30.7	54.0	14.8	0.01	31.4	209.3	8.7	476.0	0.13	0.09

TABLE B7
NCWCD WEATHER STATION DATA
LONGMONT SOUTH
2003

Date		Temperature			Relative Humidity	Dew Point	Precipitation Total	Wind			Solar Radiation	ASCE Calculation	
Month	Day	Max. (°F)	Min. (°F)	Average (°F)	Average (%)	Average (°F)	(inch)	Max (mph)	Total (miles)	Average (mph)	Total (Langl)	ET_r Alfalfa (inch)	ET_o Grass (inch)
3	29	42.1	17.7	31.2	54.2	15.5		24.2	135.5	5.6	319.3	0.10	0.07
3	30	61.2	21.3	42.3	52.5	22.9		26.7	121.5	5.1	498.5	0.17	0.13
3	31	69.9	35.4	57.2	29.4	22.3		19.4	143.6	6.0	432.2	0.24	0.17
4	1	78.6	47.4	62.6	22.1	21.8		21.9	180.7	7.5	464.7	0.35	0.23
4	2	75.7	40.6	60.5	21.0	18.8		29.7	254.7	10.6	503.6	0.38	0.25
4	3	60.6	33.8	47.3	44.9	24.8		25.4	179.0	7.5	463.4	0.21	0.15
4	4	50.6	27.6	39.6	43.6	17.0	0.01	31.9	191.9	8.0	553.5	0.18	0.13
4	5	47.4	24.9	37.4	70.0	28.1	0.13	16.0	141.6	5.9	319.4	0.09	0.07
4	6	44.0	27.6	32.9	89.0	29.9	0.12	19.0	160.5	6.7	330.0	0.08	0.06
4	7	42.6	28.3	32.6	86.9	29.1	0.08	22.4	109.5	4.6	298.4	0.07	0.06
4	8	59.4	22.4	39.7	67.4	27.1	0.01	11.0	71.7	3.0	555.3	0.14	0.12
4	9	76.2	27.6	52.5	40.8	23.3		11.7	85.9	3.6	608.1	0.24	0.18
4	10	75.2	36.9	57.8	28.4	21.7	0.01	19.1	106.1	4.4	596.5	0.26	0.19
4	11	76.6	35.9	57.9	37.5	29.2	0.02	24.0	117.0	4.9	559.4	0.26	0.19
4	12	80.1	37.2	59.9	32.3	26.7		12.8	88.3	3.7	542.8	0.25	0.19
4	13	81.0	40.3	63.4	23.1	22.2		15.2	104.6	4.4	622.8	0.29	0.21
4	14	80.9	42.4	64.0	21.5	20.7		27.3	165.5	6.9	550.8	0.35	0.24
4	15	73.2	44.3	56.0	43.1	31.7	0.20	38.4	227.8	9.5	330.6	0.31	0.21
4	16	63.4	40.0	53.1	40.2	28.8	0.01	35.9	192.8	8.0	627.8	0.25	0.19
4	17	62.0	33.8	49.1	59.1	34.6	0.01	26.6	139.8	5.8	456.8	0.17	0.13
4	18	63.3	42.9	52.1	53.7	33.8	0.08	31.9	230.9	9.6	517.9	0.24	0.17
4	19	52.2	37.1	43.8	75.1	36.1	0.29	26.5	201.2	8.4	284.8	0.11	0.09
4	20	60.0	31.8	46.3	59.6	31.5		15.4	75.1	3.1	600.3	0.16	0.14
4	21	63.6	32.4	48.6	64.5	36.2		27.4	118.7	4.9	498.9	0.17	0.13
4	22	66.3	40.9	51.1	73.5	42.1	0.01	23.6	111.8	4.7	410.4	0.16	0.12
4	23	55.8	40.1	45.0	84.2	40.6	0.53	43.3	283.9	11.8	135.3	0.11	0.08
4	24	51.7	37.8	42.6	83.3	37.9	0.21	26.4	168.5	7.0	270.9	0.10	0.08
4	25	58.4	35.7	46.7	85.6	42.6	0.01	10.7	80.8	3.4	361.3	0.10	0.09
4	26	73.2	36.3	55.4	64.7	41.2		14.9	99.1	4.1	601.7	0.21	0.17

TABLE B7
NCWCD WEATHER STATION DATA
LONGMONT SOUTH
2003

Date		Temperature			Relative Humidity	Dew Point	Precipitation Total	Wind			Solar Radiation	ASCE Calculation	
Month	Day	Max. (°F)	Min. (°F)	Average (°F)	Average (%)	Average (°F)	(inch)	Max (mph)	Total (miles)	Average (mph)	Total (Langl)	ET_r Alfalfa (inch)	ET_o Grass (inch)
4	27	65.5	39.6	52.4	51.3	34.4	0.01	20.8	157.4	6.6	608.3	0.23	0.18
4	28	61.4	41.7	52.3	76.9	45.2		19.1	162.7	6.8	359.9	0.13	0.10
4	29	64.4	41.8	52.3	79.2	45.6		20.0	121.8	5.1	441.3	0.14	0.12
4	30	59.4	39.2	47.5	76.4	39.8	0.01	25.0	113.5	4.7	247.2	0.11	0.09
5	1	58.3	34.0	45.8	77.3	38.3		20.8	106.9	4.5	459.8	0.13	0.11
5	2	66.7	33.7	50.4	66.2	37.8		13.8	74.7	3.1	544.0	0.17	0.14
5	3	75.0	36.6	57.3	45.3	32.6	0.01	29.4	180.5	7.5	577.9	0.30	0.22
5	4	65.6	43.3	53.5	42.6	30.8	0.01	29.1	168.3	7.0	366.7	0.23	0.16
5	5	61.9	37.2	51.2	40.7	26.6	0.02	40.8	292.7	12.2	599.4	0.28	0.20
5	6	63.9	39.7	51.4	49.8	32.3		22.4	102.6	4.3	608.4	0.20	0.17
5	7	65.9	32.4	49.5	59.6	34.8		18.9	86.3	3.6	504.1	0.17	0.14
5	8	59.8	37.4	48.4	71.7	39.2		28.7	139.9	5.8	392.5	0.14	0.11
5	9	43.8	31.9	39.4	87.0	35.9	0.57	12.2	100.8	4.2	120.6	0.04	0.04
5	10	50.9	31.8	38.8	85.5	34.5	1.25	13.1	86.4	3.6	463.6	0.11	0.09
5	11	59.9	31.8	46.6	70.4	36.8		14.2	93.3	3.9	636.1	0.16	0.14
5	12	72.2	35.2	54.6	59.4	39.1		17.7	89.0	3.7	670.4	0.22	0.18
5	13	73.2	40.4	58.8	49.7	38.3		39.1	195.7	8.2	587.2	0.28	0.21
5	14	72.8	43.6	60.5	49.1	40.1		14.9	112.1	4.7	676.5	0.25	0.20
5	15	67.6	43.9	56.1	72.1	47.1		22.7	118.8	5.0	400.0	0.15	0.13
5	16	76.4	50.5	62.6	68.5	50.4		14.2	106.6	4.4	576.0	0.22	0.18
5	17	85.0	49.9	67.1	49.4	45.4		18.3	101.8	4.2	534.3	0.27	0.21
5	18	74.1	47.3	61.6	56.0	45.6	0.01	29.3	158.8	6.6	477.1	0.23	0.18
5	19	54.4	40.0	44.3	77.6	38.0		19.9	116.7	4.9	162.9	0.09	0.07
5	20	59.5	40.9	47.9	69.1	38.3		12.6	79.0	3.3	433.4	0.14	0.12
5	21	75.6	35.2	57.7	57.7	40.0		14.5	87.6	3.6	663.1	0.23	0.19
5	22	77.2	41.4	62.6	53.7	44.4	0.02	12.1	90.5	3.8	587.1	0.22	0.19
5	23	78.9	47.5	63.9	67.0	51.7		11.5	92.6	3.9	695.6	0.24	0.21
5	24	72.4	52.5	61.2	77.2	54.1		15.0	85.8	3.6	283.8	0.13	0.11
5	25	73.4	49.6	60.6	81.2	54.4		10.4	68.4	2.9	395.9	0.14	0.13

TABLE B7
NCWCD WEATHER STATION DATA
LONGMONT SOUTH
2003

Date		Temperature			Relative Humidity	Dew Point	Precipitation Total	Wind			Solar Radiation	ASCE Calculation	
Month	Day	Max. (°F)	Min. (°F)	Average (°F)	Average (%)	Average (°F)	(inch)	Max (mph)	Total (miles)	Average (mph)	Total (Langl)	ET_r Alfalfa (inch)	ET_o Grass (inch)
5	26	77.2	47.1	62.5	71.4	52.4		23.8	107.6	4.5	456.3	0.19	0.16
5	27	83.6	49.5	66.9	67.2	54.5		16.5	86.6	3.6	594.3	0.23	0.20
5	28	84.7	54.3	68.1	71.3	58.1		10.7	82.8	3.5	566.0	0.23	0.19
5	29	94.1	52.2	75.0	47.3	49.9	0.01	32.3	153.9	6.4	636.0	0.38	0.29
5	30	88.1	55.6	71.3	53.0	52.0		23.4	111.7	4.7	532.1	0.28	0.22
5	31	75.8	54.0	63.6	80.7	57.3	0.05	20.2	96.1	4.0	440.2	0.17	0.14
6	1	77.4	52.0	64.7	65.4	52.3	0.02	26.5	100.7	4.2	408.4	0.19	0.15
6	2	75.2	47.7	61.8	62.4	47.5	0.02	30.4	137.1	5.7	640.0	0.25	0.20
6	3	68.0	47.7	58.5	70.5	48.5		18.5	98.9	4.1	517.5	0.17	0.15
6	4	60.4	47.1	52.1	86.0	48.0	0.11	21.7	107.6	4.5	219.4	0.09	0.08
6	5	66.3	46.7	53.9	76.7	46.1	0.02	21.0	97.0	4.0	526.1	0.17	0.15
6	6	70.2	43.9	53.5	76.2	45.2	0.20	26.8	126.3	5.3	508.3	0.20	0.16
6	7	64.6	43.3	51.7	70.7	41.7	0.01	15.1	85.4	3.6	603.9	0.18	0.16
6	8	77.2	36.7	58.5	58.7	41.3		14.1	73.0	3.0	664.8	0.23	0.19
6	9	82.2	45.8	62.3	58.4	46.2	0.12	42.0	131.2	5.5	375.3	0.25	0.18
6	10	79.7	48.0	63.2	64.8	50.1		28.3	100.8	4.2	572.0	0.23	0.19
6	11	84.3	47.6	66.5	54.5	46.8		25.2	105.9	4.4	616.8	0.28	0.22
6	12	78.1	46.2	63.1	56.1	46.0		25.3	103.8	4.3	558.3	0.24	0.19
6	13	74.9	51.9	60.5	70.4	50.5		20.7	99.4	4.1	393.2	0.18	0.15
6	14	80.2	48.8	65.4	65.2	51.7		14.0	90.7	3.8	641.4	0.24	0.20
6	15	87.8	49.5	68.8	51.1	47.5		13.7	84.7	3.5	653.5	0.28	0.23
6	16	82.4	52.5	69.1	55.5	51.2		18.9	114.4	4.8	540.4	0.25	0.20
6	17	74.3	52.9	63.9	73.0	54.4	1.49	24.6	128.9	5.4	458.9	0.19	0.16
6	18	71.8	54.6	62.1	81.4	56.0	0.02	15.5	80.1	3.3	422.7	0.15	0.13
6	19	76.9	57.0	65.5	72.0	55.3	0.01	14.5	90.1	3.8	539.5	0.21	0.18
6	20	75.2	53.4	63.0	70.9	52.5	0.04	34.3	154.2	6.4	490.8	0.22	0.18
6	21	86.8	51.1	68.9	46.4	43.8		21.0	111.4	4.6	710.1	0.33	0.26
6	22	78.4	51.1	64.7	60.4	49.4	0.19	22.0	123.3	5.1	673.0	0.27	0.22
6	23	73.0	56.6	65.3	64.8	52.9	0.03	15.1	109.4	4.6	547.3	0.21	0.18

TABLE B7
NCWCD WEATHER STATION DATA
LONGMONT SOUTH
2003

Date		Temperature			Relative Humidity	Dew Point	Precipitation Total	Wind			Solar Radiation	ASCE Calculation	
Month	Day	Max. (°F)	Min. (°F)	Average (°F)	Average (%)	Average (°F)	(inch)	Max (mph)	Total (miles)	Average (mph)	Total (Langl)	ET_r Alfalfa (inch)	ET_o Grass (inch)
6	24	64.6	49.8	56.2	81.8	50.9		18.8	158.3	6.6	140.9	0.10	0.08
6	25	65.7	46.3	55.3	73.0	46.1		13.3	86.4	3.6	430.3	0.15	0.13
6	26	75.8	44.9	61.5	55.3	42.8		14.1	87.2	3.6	717.5	0.25	0.21
6	27	84.7	46.3	67.4	47.8	43.9		17.1	86.2	3.6	715.8	0.29	0.24
6	28	85.7	50.1	68.0	50.8	48.3	0.01	26.7	132.8	5.5	670.9	0.32	0.25
6	29	75.6	56.4	64.0	73.8	55.1		24.8	157.1	6.5	537.7	0.23	0.18
6	30	88.4	51.9	70.0	64.8	55.6		8.7	62.4	2.6	657.5	0.25	0.22
7	1	95.6	53.4	75.1	45.7	49.2	0.03	45.7	73.8	3.1	562.9	0.28	0.23
7	2	94.0	52.9	77.3	36.6	44.3		15.5	89.9	3.7	713.6	0.33	0.27
7	3	96.2	57.1	77.5	33.6	44.0		11.5	72.5	3.0	667.5	0.31	0.25
7	4	92.7	58.6	78.9	27.4	40.4		15.9	96.1	4.0	691.8	0.34	0.27
7	5	94.9	57.3	77.3	33.2	43.9		19.6	98.9	4.1	666.1	0.35	0.27
7	6	91.0	54.1	75.0	34.3	43.3	0.01	38.9	117.8	4.9	530.8	0.32	0.24
7	7	82.1	54.8	69.6	53.4	51.5		26.4	109.9	4.6	518.2	0.25	0.20
7	8	98.4	52.0	76.5	42.9	46.4		20.1	83.3	3.5	714.2	0.34	0.28
7	9	86.0	53.4	72.3	40.4	45.7		15.1	93.9	3.9	709.4	0.30	0.25
7	10	93.4	50.9	74.0	38.9	44.5		14.7	87.6	3.6	722.1	0.33	0.27
7	11	86.9	52.5	71.3	50.6	52.3		14.5	102.6	4.3	554.4	0.26	0.21
7	12	90.8	57.2	73.3	60.3	57.7		10.6	81.1	3.4	611.0	0.27	0.22
7	13	98.3	54.6	77.6	40.6	48.0		22.8	83.1	3.5	547.7	0.31	0.24
7	14	94.5	57.9	80.1	28.5	42.6		16.8	108.1	4.5	689.6	0.36	0.28
7	15	88.7	57.9	74.2	48.4	52.9		13.2	82.6	3.4	503.6	0.25	0.20
7	16	99.3	57.9	78.2	43.5	51.3		25.5	105.6	4.4	510.7	0.34	0.25
7	17	93.3	58.9	78.1	43.6	53.9		14.2	90.7	3.8	548.8	0.28	0.23
7	18	94.9	62.7	76.9	52.7	57.7	0.22	34.6	108.2	4.5	542.5	0.31	0.24
7	19	87.7	59.6	73.2	67.6	60.9	0.01	19.7	110.6	4.6	552.8	0.25	0.21
7	20	90.0	60.3	74.7	52.8	55.2	0.01	24.6	97.2	4.0	431.9	0.25	0.20
7	21	94.9	54.3	76.7	46.6	52.0	0.01	29.4	90.5	3.8	621.4	0.31	0.25
7	22	86.2	55.8	72.3	53.5	53.8		11.8	69.8	2.9	655.0	0.25	0.22

TABLE B7
NCWCD WEATHER STATION DATA
LONGMONT SOUTH
2003

Date		Temperature			Relative Humidity	Dew Point	Precipitation Total	Wind			Solar Radiation	ASCE Calculation	
Month	Day	Max. (°F)	Min. (°F)	Average (°F)	Average (%)	Average (°F)	(inch)	Max (mph)	Total (miles)	Average (mph)	Total (Langl)	ET_r Alfalfa (inch)	ET_o Grass (inch)
7	23	91.7	54.7	73.3	53.0	53.3		25.6	95.1	4.0	459.3	0.26	0.20
7	24	98.1	58.3	81.3	36.6	48.5	0.02	21.9	128.2	5.3	633.9	0.38	0.29
7	25	92.4	64.6	78.1	38.9	50.4		24.9	113.9	4.7	413.2	0.30	0.22
7	26	91.8	65.0	76.7	49.9	56.2		21.2	111.3	4.6	581.0	0.31	0.25
7	27	85.5	62.9	72.1	66.6	59.6		25.4	105.9	4.4	502.7	0.24	0.20
7	28	81.6	61.0	70.2	71.4	60.3		13.3	89.0	3.7	442.4	0.19	0.16
7	29	82.1	58.4	67.3	72.8	57.8	0.01	25.3	86.1	3.6	393.0	0.19	0.15
7	30	85.4	52.2	68.4	61.9	53.2		28.3	75.4	3.1	567.8	0.23	0.19
7	31	92.0	51.9	71.6	50.5	50.6		40.0	108.2	4.5	477.7	0.29	0.22
8	1	88.2	59.1	72.5	52.5	53.9		18.3	94.3	3.9	573.1	0.27	0.22
8	2	87.3	54.2	71.5	57.7	54.6		11.4	72.1	3.0	634.1	0.25	0.21
8	3	89.0	56.7	73.1	55.1	54.9		26.9	108.5	4.5	443.4	0.25	0.19
8	4	92.0	58.0	76.3	48.2	52.4	0.01	17.9	91.6	3.8	595.7	0.29	0.23
8	5	91.0	58.9	76.2	40.9	49.0		15.3	103.4	4.3	654.5	0.32	0.25
8	6	98.3	56.8	78.1	41.1	48.9		18.0	91.9	3.8	563.5	0.32	0.24
8	7	94.2	60.7	75.2	45.4	51.8	0.01	31.4	116.9	4.9	387.6	0.30	0.22
8	8	89.1	61.0	73.0	55.9	55.1	0.02	22.2	115.9	4.8	433.5	0.27	0.20
8	9	92.7	54.6	74.0	51.5	52.4		16.1	88.4	3.7	527.0	0.27	0.21
8	10	90.6	57.2	74.2	52.7	54.1		12.7	89.4	3.7	638.0	0.28	0.23
8	11	89.1	58.0	74.2	51.8	54.2	0.01	30.6	110.4	4.6	516.7	0.27	0.21
8	12	91.0	55.9	74.1	54.0	54.4		11.9	92.3	3.8	582.6	0.27	0.22
8	13	90.9	59.6	74.0	47.2	50.4		13.9	97.7	4.1	626.3	0.30	0.24
8	14	86.4	53.7	70.3	44.0	45.4		11.5	91.6	3.8	649.5	0.28	0.23
8	15	88.6	54.3	70.8	45.1	46.2		13.1	102.1	4.3	624.9	0.30	0.23
8	16	91.0	55.9	72.8	41.4	46.0		29.4	111.7	4.7	621.3	0.32	0.25
8	17	81.2	57.7	70.7	44.3	47.3		23.5	135.1	5.6	425.0	0.26	0.19
8	18	73.3	54.6	63.7	73.9	54.8	0.33	25.1	122.2	5.1	418.3	0.17	0.14
8	19	87.0	52.4	67.8	63.2	52.5		11.5	65.9	2.7	564.9	0.23	0.19
8	20	92.4	54.7	75.5	42.6	47.2		16.4	78.6	3.3	599.0	0.28	0.22

TABLE B7
NCWCD WEATHER STATION DATA
LONGMONT SOUTH
2003

Date		Temperature			Relative Humidity	Dew Point	Precipitation Total	Wind			Solar Radiation	ASCE Calculation	
Month	Day	Max. (°F)	Min. (°F)	Average (°F)	Average (%)	Average (°F)	(inch)	Max (mph)	Total (miles)	Average (mph)	Total (Langl)	ET_r Alfalfa (inch)	ET_o Grass (inch)
8	21	83.0	56.8	71.0	52.2	52.3		13.7	63.9	2.7	350.4	0.17	0.14
8	22	89.5	55.6	73.0	51.1	52.4	0.01	32.4	139.7	5.8	476.0	0.29	0.22
8	23	86.5	56.6	72.2	54.3	53.6	0.01	21.9	86.6	3.6	462.9	0.22	0.18
8	24	85.7	53.4	71.3	57.0	54.1		18.2	90.3	3.8	504.8	0.22	0.18
8	25	85.1	59.9	72.1	52.7	52.7		24.8	108.0	4.5	324.3	0.22	0.16
8	26	87.1	53.6	72.8	44.1	47.7		22.0	67.4	2.8	579.8	0.23	0.19
8	27	87.9	54.8	69.9	56.4	53.2		27.4	99.8	4.2	467.6	0.24	0.19
8	28	81.8	59.6	71.2	49.8	50.5	0.01	13.8	73.5	3.1	464.6	0.20	0.17
8	29	75.9	51.0	62.4	72.1	53.0	1.23	19.9	113.9	4.7	500.2	0.19	0.16
8	30	62.9	51.8	56.6	93.7	54.8	1.08	18.9	81.1	3.4	192.7	0.07	0.06
8	31	71.6	51.3	59.3	85.0	54.4	0.01	9.3	58.3	2.4	306.7	0.11	0.10
9	1	79.8	51.8	63.9	71.5	52.4		10.3	43.2	1.8	556.9	0.17	0.16
9	2	80.7	51.6	66.1	63.9	52.5	0.01	17.5	89.9	3.7	478.1	0.20	0.16
9	3	75.4	54.2	63.0	72.6	53.4	0.01	12.0	63.0	2.6	401.9	0.15	0.13
9	4	83.9	49.7	65.6	66.0	52.5		7.1	41.8	1.7	537.9	0.18	0.16
9	5	86.3	51.3	69.0	54.5	49.8		12.2	56.4	2.4	516.9	0.20	0.17
9	6	79.2	56.3	66.5	60.1	51.7		15.6	73.1	3.0	272.4	0.15	0.12
9	7	71.3	55.5	62.6	73.5	53.8		17.5	75.2	3.1	254.7	0.11	0.09
9	8	83.0	47.1	63.6	67.3	50.2	0.06	45.7	103.3	4.3	431.2	0.21	0.16
9	9	71.4	53.7	63.0	65.4	51.1		30.4	88.6	3.7	314.7	0.14	0.11
9	10	70.4	44.2	60.7	53.2	42.6		30.3	172.1	7.2	430.7	0.20	0.15
9	11	69.9	41.7	54.2	61.5	40.0		15.1	77.7	3.2	445.5	0.16	0.13
9	12	78.5	41.3	59.4	53.8	40.9		32.4	141.3	5.9	517.0	0.25	0.18
9	13	55.8	38.9	47.9	69.6	38.2		14.8	85.4	3.6	288.3	0.09	0.08
9	14	70.1	33.6	50.1	62.4	36.0		15.9	79.5	3.3	517.1	0.17	0.13
9	15	83.3	33.6	59.9	45.4	34.5		12.5	67.4	2.8	535.0	0.21	0.16
9	16	84.1	45.7	67.0	34.7	37.3		20.5	104.2	4.3	451.6	0.24	0.18
9	17	78.8	38.5	58.3	54.0	39.6	0.20	39.1	146.7	6.1	371.8	0.24	0.17
9	18	57.3	36.0	45.3	67.9	34.2	0.01	11.8	44.9	1.9	500.8	0.11	0.10

TABLE B7
NCWCD WEATHER STATION DATA
LONGMONT SOUTH
2003

Date		Temperature			Relative Humidity	Dew Point	Precipitation Total	Wind			Solar Radiation	ASCE Calculation	
Month	Day	Max. (°F)	Min. (°F)	Average (°F)	Average (%)	Average (°F)	(inch)	Max (mph)	Total (miles)	Average (mph)	Total (Langl)	ET_r Alfalfa (inch)	ET_o Grass (inch)
9	19	70.5	33.4	52.2	55.7	34.5		12.0	57.3	2.4	496.2	0.15	0.12
9	20	74.3	38.3	56.7	53.9	37.7	0.01	21.7	63.2	2.6	340.1	0.14	0.11
9	21	73.8	37.8	56.1	53.8	37.9	0.01	24.5	75.7	3.2	496.8	0.17	0.14
9	22	77.7	37.7	55.9	56.5	39.3		12.3	64.6	2.7	491.1	0.17	0.14
9	23	83.5	39.6	62.8	40.3	34.1	0.01	26.6	117.5	4.9	500.7	0.26	0.19
9	24	66.3	41.1	55.8	47.2	36.0		12.4	59.4	2.5	476.1	0.14	0.11
9	25	87.1	34.2	60.4	45.5	33.4		15.6	70.3	2.9	481.3	0.22	0.16
9	26	77.1	45.3	61.9	38.1	34.6		17.2	54.6	2.3	465.9	0.16	0.13
9	27	71.3	38.6	54.7	54.2	36.5		11.0	66.9	2.8	450.5	0.15	0.12
9	28	69.2	35.0	53.0	50.9	33.3		14.0	56.8	2.4	454.6	0.14	0.11
9	29	64.8	36.5	51.7	55.2	35.1		22.6	70.1	2.9	439.5	0.13	0.10
9	30	49.8	35.1	43.8	73.9	36.0		12.9	81.4	3.4	223.1	0.07	0.05
10	1	65.0	31.2	47.1	74.7	38.6		8.8	36.1	1.5	330.6	0.09	0.07
10	2	69.4	39.5	54.8	65.1	42.6		16.2	66.2	2.8	297.5	0.11	0.09
10	3	66.3	46.1	56.3	54.3	38.4		9.3	45.8	1.9	307.3	0.10	0.08
10	4	72.3	39.9	54.5	51.0	35.5		12.1	53.6	2.2	415.2	0.13	0.10
10	5	77.2	36.6	58.1	47.6	34.9		15.2	85.3	3.6	409.6	0.18	0.13
10	6	78.1	40.0	59.5	40.2	32.1		10.0	60.7	2.5	419.4	0.16	0.12
10	7	79.2	39.5	59.4	40.4	32.4		10.7	65.6	2.7	356.5	0.16	0.12
10	8	79.6	46.8	63.0	38.4	35.5		19.7	71.4	3.0	369.6	0.17	0.12
10	9	85.8	40.9	63.0	41.7	35.8		10.9	65.1	2.7	400.3	0.18	0.13
10	10	81.7	45.6	62.8	41.4	36.5		32.7	107.0	4.5	345.9	0.22	0.15
10	11	60.4	35.9	48.6	43.3	25.8	0.01	16.6	92.3	3.8	416.5	0.14	0.10
10	12	82.8	28.8	55.5	36.1	23.0		20.3	102.6	4.3	423.1	0.24	0.16
10	13	64.1	31.0	50.2	34.1	21.5	0.01	40.9	175.9	7.3	383.1	0.20	0.14
10	14	66.4	28.3	46.0	40.4	20.0		18.4	88.8	3.7	414.0	0.16	0.11
10	15	71.6	30.1	50.5	33.1	19.3		15.5	75.5	3.1	329.0	0.16	0.11
10	16	73.3	32.5	50.1	42.4	26.2		17.5	77.1	3.2	385.4	0.16	0.11
10	17	83.8	32.8	59.4	40.3	29.9		14.8	87.0	3.6	383.9	0.20	0.14

TABLE B7
NCWCD WEATHER STATION DATA
LONGMONT SOUTH
2003

Date		Temperature			Relative Humidity	Dew Point	Precipitation Total	Wind			Solar Radiation	ASCE Calculation	
Month	Day	Max. (°F)	Min. (°F)	Average (°F)	Average (%)	Average (°F)	(inch)	Max (mph)	Total (miles)	Average (mph)	Total (Langl)	ET_r Alfalfa (inch)	ET_o Grass (inch)
10	18	83.5	41.6	62.7	31.7	29.6		13.0	83.1	3.5	389.9	0.20	0.13
10	19	87.3	40.7	64.1	26.1	24.2		20.8	96.3	4.0	390.2	0.24	0.15
10	20	79.8	40.0	59.9	29.5	25.6		12.6	78.4	3.3	370.1	0.18	0.12
10	21	81.7	40.4	61.1	30.7	26.8		13.1	72.4	3.0	356.7	0.17	0.12
10	22	84.4	41.0	61.7	30.2	27.0		9.5	67.1	2.8	352.7	0.17	0.12
10	23	85.5	40.5	62.1	27.6	24.9		12.3	80.6	3.4	359.9	0.20	0.13
10	24	63.9	40.0	51.0	32.7	22.4		18.4	53.6	2.2	336.3	0.11	0.08
10	25	50.0	27.2	38.8	52.4	20.7		19.7	56.6	2.4	361.3	0.08	0.06
10	26	63.4	24.4	46.0	39.0	20.9		16.0	62.6	2.6	218.5	0.10	0.07
10	27	67.5	43.9	58.6	30.9	26.7		33.0	216.3	9.0	172.5	0.23	0.15
10	28	67.5	39.9	49.8	54.3	32.9		32.1	91.1	3.8	279.6	0.14	0.09
10	29	80.1	41.7	65.1	28.9	27.9		47.5	304.8	12.7	359.8	0.38	0.23
10	30	44.1	25.4	28.8	95.0	27.6	0.01	8.6	10.8	0.5	51.6	0.02	0.02
10	31	28.2	21.8	25.6	96.5	24.8	0.01	99.9	-99.9	-4.2	70.6		
11	1	36.7	27.2	32.3	93.0	30.6	0.16	10.3	32.3	1.3	65.8		
11	2	38.4	30.5	35.4	94.4	34.0		8.5	22.0	0.9	57.2		
11	3	36.2	31.4	34.0	98.5	33.7	0.28	7.5	22.1	0.9	59.7		
11	4	48.8	25.2	37.7	63.2	24.8	0.04	27.7	149.7	6.2	300.3		
11	5	32.3	24.7	28.8	91.8	26.7	0.02	8.3	26.3	1.1	116.5		
11	6	36.7	27.0	31.4	89.4	28.5	0.01	8.5	21.9	0.9	120.1		
11	7	45.3	30.4	36.0	78.0	29.5		8.8	34.7	1.4	249.1		
11	8	52.4	29.3	37.8	74.5	29.9		9.6	40.8	1.7	256.7		
11	9	54.8	26.9	39.0	74.3	30.7		8.1	45.8	1.9	248.4		
11	10	60.6	28.4	46.4	53.8	28.5	0.03	37.3	237.2	9.9	281.7		
11	11	58.2	35.5	48.5	39.5	23.3	0.02	57.9	376.0	15.7	293.9		
11	12	50.8	28.9	38.4	54.0	22.3		39.4	151.6	6.3	193.5		
11	13	52.5	28.3	38.0	66.6	27.3		11.0	68.6	2.9	239.1		
11	14	56.0	28.6	43.0	53.0	25.2		36.1	156.3	6.5	271.9		
11	15	57.7	23.1	39.3	51.3	21.6		16.9	87.1	3.6	261.3		

TABLE B7
NCWCD WEATHER STATION DATA
LONGMONT SOUTH
2003

Date		Temperature			Relative Humidity	Dew Point	Precipitation Total	Wind			Solar Radiation	ASCE Calculation	
Month	Day	Max. (°F)	Min. (°F)	Average (°F)	Average (%)	Average (°F)	(inch)	Max (mph)	Total (miles)	Average (mph)	Total (Langl)	ET_r Alfalfa (inch)	ET_o Grass (inch)
11	16	49.7	20.6	34.3	64.1	22.7		10.5	57.7	2.4	204.7		
11	17	55.3	24.6	40.3	45.3	20.4		39.3	204.8	8.5	220.8		
11	18	55.3	21.1	42.0	35.0	15.4		33.5	262.6	10.9	269.7		
11	19	69.7	36.6	55.5	22.4	15.7		28.2	207.8	8.7	259.2		
11	20	71.7	31.7	54.7	23.5	13.9		35.7	151.9	6.3	228.1		
11	21	34.7	27.5	30.8	72.1	22.9		15.7	75.6	3.1	124.8		
11	22	30.4	2.9	18.2	81.0	13.7	0.06	19.5	36.9	1.5	70.2		
11	23	21.7	-6.9	8.7	69.3	0.2	0.01	13.8	84.0	3.5	273.7		
11	24	52.8	0.9	25.8	56.1	10.3	0.02	38.2	188.0	7.8	247.4		
11	25	42.8	19.6	32.1	54.7	16.8		29.6	133.6	5.6	226.3		
11	26	44.3	17.2	31.1	53.1	14.2		30.0	132.5	5.5	236.8		
11	27	39.5	14.3	27.3	48.3	8.4		22.5	124.4	5.2	261.6		
11	28	50.9	10.8	28.1	52.0	11.1		22.1	57.4	2.4	187.3		
11	29	67.6	27.8	51.2	27.6	17.7		41.2	163.9	6.8	200.1		
11	30	58.2	33.8	47.6	51.6	29.8		28.5	91.0	3.8	98.0		
12	1	45.0	24.8	34.5	66.7	24.3		15.0	84.8	3.5	253.5		
12	2	60.3	20.0	37.7	56.0	19.9		36.7	130.4	5.4	196.4		
12	3	43.7	19.2	32.5	59.2	19.2		10.2	59.0	2.5	146.5		
12	4	35.5	18.5	27.7	64.4	17.2		17.7	33.9	1.4	98.2		
12	5	38.8	11.3	23.8	61.2	11.8	0.01	6.9	39.5	1.6	214.4		
12	6	55.8	21.4	35.7	54.0	19.1		14.0	73.6	3.1	172.6		
12	7	64.1	28.1	44.9	46.1	24.1		33.2	157.2	6.5	224.9		
12	8	39.0	22.4	29.4	89.2	26.6	0.26	17.2	56.5	2.4	35.3		
12	9	32.4	6.1	21.9	89.7	19.7	0.01	9.4	71.1	3.0	254.7		
12	10	27.8	5.1	15.3	86.8	12.3		9.6	56.8	2.4	218.4		
12	11	27.5	3.8	15.0	86.6	12.1		10.5	49.9	2.1	157.1		
12	12	37.8	6.6	18.4	79.2	12.9		9.1	52.3	2.2	230.6		
12	13	44.9	6.3	28.0	66.1	17.0	0.02	28.8	131.3	5.5	171.6		
12	14	64.1	30.5	44.1	43.3	22.2		19.9	117.3	4.9	224.6		

TABLE B7
NCWCD WEATHER STATION DATA
LONGMONT SOUTH
2003

Date		Temperature			Relative Humidity	Dew Point	Precipitation Total	Wind			Solar Radiation	ASCE Calculation	
Month	Day	Max. (°F)	Min. (°F)	Average (°F)	Average (%)	Average (°F)	(inch)	Max (mph)	Total (miles)	Average (mph)	Total (Langl)	ET_r Alfalfa (inch)	ET_o Grass (inch)
12	15	44.3	19.8	31.7	48.4	14.9	0.02	36.8	158.6	6.6	139.0		
12	16	42.2	10.7	28.0	47.1	9.6		16.2	76.9	3.2	228.3		
12	17	58.2	24.9	43.9	34.5	15.4		44.4	238.5	9.9	148.4		
12	18	42.8	17.5	29.5	61.5	17.2		8.6	54.3	2.3	215.1		
12	19	54.7	17.4	32.3	60.8	18.8		8.3	52.8	2.2	224.8		
12	20	65.4	23.5	41.7	46.8	19.5		22.3	103.5	4.3	98.8		
12	21	50.5	25.7	36.5	59.7	23.0		14.5	88.0	3.7	177.8		
12	22	41.3	19.4	31.4	77.4	24.7	0.02	11.8	79.9	3.3	217.7		
12	23	45.1	15.7	29.5	70.6	20.5		7.8	47.8	2.0	226.5		
12	24	48.4	16.1	31.4	64.1	19.5		8.5	54.3	2.3	209.9		
12	25	52.6	20.9	35.0	53.6	18.0		13.5	75.2	3.1	129.9		
12	26	45.0	20.9	33.0	56.1	18.2	0.03	29.9	118.4	4.9	201.6		
12	27	38.4	24.1	31.8	25.3	0.1		34.5	281.5	11.7	235.9		
12	28	34.8	20.6	28.0	24.0	-4.3		35.1	261.1	10.9	188.3		
12	29	43.2	20.8	32.7	29.9	4.5		32.4	202.6	8.4	119.2		
12	30	55.5	15.8	37.5	44.8	16.5		34.7	184.1	7.7	252.1		
12	31	45.9	18.7	31.2	59.8	18.0		21.6	72.5	3.0	196.1		
							12.66						**39.06**

TABLE B8
NCWCD WEATHER STATION DATA
LONGMONT SOUTH
2002

Date		Temperature			Relative Humidity	Dew Point	Precipitation Total	Wind			Solar Radiation	ASCE Calculation	
Month	Day	Max. (°F)	Min. (°F)	Average (°F)	Average (%)	Average (°F)	(inch)	Max (mph)	Total (miles)	Average (mph)	Total (Langl)	ET_r Alfalfa (inch)	ET_o Grass (inch)
1	1	26.3	12.9	21.1	92.2	19.3		13.5	74.4	3.1	118.3		
1	2	38.3	1.4	17.0	76.3	10.0	0.01	9.7	56.7	2.4	246.6		
1	3	49.7	9.6	28.9	65.1	17.8		8.8	66.0	2.8	236.5		
1	4	40.5	19.1	31.4	81.7	26.4		17.3	103.6	4.3	101.7		
1	5	45.3	10.7	27.5	72.9	18.6	0.01	13.6	72.3	3.0	186.1		
1	6	46.5	15.3	30.1	64.1	18.6	0.01	12.3	74.0	3.1	216.0		
1	7	63.1	20.1	43.1	54.1	25.6	0.04	30.0	201.4	8.4	218.3		
1	8	70.7	45.8	57.7	25.7	22.3		24.0	194.8	8.1	76.8		
1	9	57.5	32.0	43.7	60.1	29.5	0.03	24.4	127.7	5.3	208.2		
1	10	41.0	16.1	29.2	97.4	28.4	0.30	10.3	77.4	3.2	248.2		
1	11	46.4	15.6	30.6	71.7	22.5		12.3	78.1	3.3	178.9		
1	12	53.5	15.1	32.6	68.7	22.8	0.04	28.6	114.8	4.8	215.3		
1	13	48.3	23.0	36.2	47.0	17.3		35.8	274.9	11.5	251.1		
1	14	38.8	13.9	25.9	66.0	15.6		14.7	127.3	5.3	250.8		
1	15	25.7	13.6	19.5	87.8	16.5		12.1	78.7	3.3	203.4		
1	16	28.4	16.7	21.8	82.0	17.0		11.9	95.7	4.0	150.0		
1	17	31.8	9.7	20.3	72.3	12.1		15.1	88.3	3.7	254.8		
1	18	33.7	9.7	19.3	62.7	8.0		22.6	76.5	3.2	264.9		
1	19	33.6	6.9	20.7	53.7	6.4		23.2	106.6	4.4	279.3		
1	20	39.3	14.5	30.0	39.7	7.8	0.01	40.9	322.4	13.4	274.2		
1	21	53.1	29.9	41.6	35.2	15.7		40.6	220.4	9.2	277.0		
1	22	56.4	22.8	40.4	45.2	18.6	0.02	28.6	216.9	9.0	224.9		
1	23	30.7	9.4	20.9	83.5	17.0	0.08	15.6	108.0	4.5	235.6		
1	24	38.1	2.4	22.0	58.4	10.3	0.01	18.3	91.6	3.8	292.8		
1	25	57.8	29.3	43.4	41.6	21.1	0.02	35.7	215.2	9.0	198.2		
1	26	65.8	35.5	50.9	22.3	12.0		33.3	239.9	10.0	303.9		
1	27	64.8	25.6	46.4	30.1	14.0		19.6	140.7	5.9	275.0		
1	28	40.3	13.8	23.7	86.7	20.3		16.1	97.4	4.1	240.9		
1	29	34.2	13.7	22.9	80.6	17.4		13.2	104.8	4.4	196.7		

TABLE B8
NCWCD WEATHER STATION DATA
LONGMONT SOUTH
2002

Date		Temperature			Relative Humidity	Dew Point	Precipitation Total	Wind			Solar Radiation	ASCE Calculation	
Month	Day	Max. (°F)	Min. (°F)	Average (°F)	Average (%)	Average (°F)	(inch)	Max (mph)	Total (miles)	Average (mph)	Total (Langl)	ET_r Alfalfa (inch)	ET_o Grass (inch)
1	30	25.7	9.2	18.6	93.0	17.0	0.05	12.7	98.7	4.1	266.4		
1	31	32.0	2.4	17.9	63.1	6.3	0.01	11.5	77.8	3.2	321.2		
2	1	37.6	9.1	22.9	64.1	12.2	0.01	9.0	65.3	2.7	315.8		
2	2	45.5	15.3	29.4	58.0	14.4		16.1	100.4	4.2	259.4		
2	3	49.7	13.8	30.6	59.2	16.4		12.8	94.8	4.0	323.8		
2	4	48.9	14.2	30.4	53.6	13.8	0.02	21.0	110.4	4.6	316.6		
2	5	40.5	15.2	27.8	48.0	9.2		11.3	77.4	3.2	332.5		
2	6	53.1	13.8	32.8	45.1	11.0		19.8	95.8	4.0	338.5		
2	7	60.9	14.4	39.3	33.3	7.2	0.01	26.0	143.2	6.0	227.9		
2	8	56.8	26.0	39.3	32.0	10.7	0.02	49.4	332.0	13.8	272.6		
2	9	36.9	15.9	32.2	34.0	6.9		48.5	423.2	17.6	82.5		
2	10	51.1	10.4	29.8	32.9	-0.1		17.2	91.3	3.8	358.2		
2	11	64.5	20.7	44.1	27.7	7.2	0.01	40.7	233.6	9.7	211.7		
2	12	33.4	18.2	25.8	62.2	14.4		15.1	84.7	3.5	220.3		
2	13	57.2	10.0	32.2	44.7	6.1		13.2	72.0	3.0	355.5		
2	14	51.3	15.6	36.0	56.7	17.3	0.01	45.1	256.9	10.7	160.0		
2	15	57.4	8.1	30.3	65.2	17.5	0.02	10.2	71.2	3.0	357.2		
2	16	54.5	15.5	34.9	44.6	13.1		11.3	93.4	3.9	377.2		
2	17	65.9	25.7	45.0	36.5	16.1	0.01	20.5	130.1	5.4	350.1		
2	18	55.6	29.3	42.6	50.0	24.5	0.01	23.5	103.8	4.3	275.8		
2	19	53.6	24.1	39.2	49.9	20.4	0.01	31.6	169.2	7.0	377.4		
2	20	54.4	28.1	42.1	40.5	18.4		33.3	241.7	10.1	338.6		
2	21	48.8	22.8	36.1	39.5	11.6		24.4	118.1	4.9	401.5		
2	22	67.5	23.2	51.1	24.9	12.7		38.2	344.2	14.3	327.2		
2	23	75.2	39.9	59.8	18.0	15.3		36.4	229.8	9.6	371.7		
2	24	54.7	24.0	35.4	70.3	25.7		25.9	149.0	6.2	271.9		
2	25	24.5	4.6	10.0	88.5	7.9	0.10	23.7	172.1	7.2	340.4		
2	26	24.4	-8.1	10.5	72.2	2.7	0.02	11.8	83.0	3.5	413.6		
2	27	34.6	4.9	21.4	67.1	12.0	0.01	16.2	107.0	4.5	401.8		

TABLE B8
NCWCD WEATHER STATION DATA
LONGMONT SOUTH
2002

Date		Temperature			Relative Humidity	Dew Point	Precipitation Total	Wind			Solar Radiation	ASCE Calculation	
Month	Day	Max. (°F)	Min. (°F)	Average (°F)	Average (%)	Average (°F)	(inch)	Max (mph)	Total (miles)	Average (mph)	Total (Langl)	ET_r Alfalfa (inch)	ET_o Grass (inch)
2	28	48.5	9.2	26.4	74.9	18.5	0.16	35.4	176.3	7.3	439.4		
3	1	21.4	1.1	11.0	93.9	10.2	0.15	21.7	156.5	6.5	316.7	0.03	0.02
3	2	23.9	-7.8	5.2	76.3	-0.6	0.01	11.4	82.2	3.4	486.4	0.05	0.04
3	3	28.0	-4.7	13.8	52.8	-0.3		15.9	122.3	5.1	475.2	0.06	0.05
3	4	53.1	11.2	36.6	43.8	16.7	0.03	32.7	212.0	8.8	460.9	0.16	0.11
3	5	54.6	29.7	42.9	38.0	18.3		34.5	209.9	8.7	443.3	0.19	0.13
3	6	55.4	26.6	40.1	62.5	27.3		33.5	139.4	5.8	424.9	0.13	0.10
3	7	60.5	22.7	41.5	62.4	25.9		36.4	176.7	7.4	435.6	0.17	0.12
3	8	35.1	-1.4	20.3	99.1	21.5	0.04	30.5	152.1	6.3	101.0	0.02	0.02
3	9	44.2	-1.6	25.7	64.0	15.0	0.01	23.5	96.7	4.0	489.4	0.09	0.07
3	10	58.9	20.3	37.0	70.3	27.6		13.2	98.2	4.1	430.8	0.12	0.09
3	11	58.0	32.2	45.5	45.9	23.6	0.02	27.0	175.8	7.3	484.9	0.19	0.13
3	12	68.7	34.4	52.8	33.4	22.5	0.01	37.7	177.8	7.4	359.1	0.24	0.16
3	13	52.6	33.7	44.3	60.4	31.1		23.4	173.4	7.2	391.9	0.13	0.09
3	14	36.1	19.1	25.9	94.0	24.3	0.19	28.3	198.0	8.3	328.6	0.05	0.04
3	15	34.2	6.4	23.5	86.0	19.9	0.01	11.6	60.2	2.5	405.3	0.05	0.05
3	16	38.9	24.8	31.3	78.3	25.1		13.0	85.6	3.6	336.0	0.06	0.05
3	17	46.0	18.6	32.0	62.8	19.1	0.02	25.8	104.9	4.4	395.8	0.10	0.08
3	18	41.0	23.3	31.5	81.1	25.7		16.7	83.3	3.5	317.7	0.06	0.05
3	19	53.7	25.2	36.4	67.9	25.1		12.9	94.8	4.0	513.7	0.13	0.10
3	20	64.1	22.7	46.6	40.3	19.2	0.01	32.5	252.4	10.5	507.5	0.26	0.17
3	21	26.3	13.2	18.8	79.8	13.4		14.9	113.5	4.7	305.0	0.05	0.04
3	22	63.4	15.1	39.3	56.8	21.7		14.2	84.8	3.5	532.3	0.16	0.12
3	23	71.7	24.7	47.8	47.3	24.4	0.01	29.7	145.0	6.0	402.0	0.24	0.16
3	24	36.2	22.6	28.6	88.3	25.5	0.01	13.5	115.2	4.8	120.2	0.04	0.03
3	25	35.5	20.2	25.6	92.6	23.7		10.4	84.5	3.5	235.8	0.05	0.04
3	26	61.6	18.6	41.6	53.5	20.6	0.02	25.6	135.3	5.6	556.5	0.19	0.14
3	27	67.2	28.3	50.2	40.4	24.7	0.03	40.8	271.6	11.3	548.2	0.29	0.19
3	28	69.7	35.6	55.9	27.1	19.7	0.01	39.2	292.6	12.2	556.1	0.35	0.23

TABLE B8
NCWCD WEATHER STATION DATA
LONGMONT SOUTH
2002

Date		Temperature			Relative Humidity	Dew Point	Precipitation Total	Wind			Solar Radiation	ASCE Calculation	
Month	Day	Max. (°F)	Min. (°F)	Average (°F)	Average (%)	Average (°F)	(inch)	Max (mph)	Total (miles)	Average (mph)	Total (Langl)	ET_r Alfalfa (inch)	ET_o Grass (inch)
3	29	57.5	25.1	40.4	65.0	28.0		23.0	105.1	4.4	515.9	0.14	0.11
3	30	55.5	26.8	41.9	58.4	27.1		14.8	91.2	3.8	394.8	0.12	0.10
3	31	66.5	23.1	46.9	54.9	28.9		14.9	84.5	3.5	570.3	0.17	0.14
4	1	77.8	34.1	62.9	23.1	19.3		39.5	348.3	14.5	537.8	0.44	0.29
4	2	34.1	23.3	26.1	68.4	17.1		16.5	141.3	5.9	173.0	0.07	0.05
4	3	49.9	22.2	34.3	48.2	16.1		13.7	112.4	4.7	550.4	0.14	0.11
4	4	62.0	19.9	42.1	41.3	18.7		17.4	112.5	4.7	591.3	0.19	0.14
4	5	66.2	27.1	48.7	44.0	25.1		15.9	93.8	3.9	553.4	0.19	0.14
4	6	76.6	36.2	57.5	37.5	27.6		28.8	133.0	5.5	462.2	0.26	0.19
4	7	68.1	39.1	53.4	47.4	33.5		28.3	124.3	5.2	450.6	0.20	0.15
4	8	57.3	37.2	46.8	75.9	39.3		24.0	134.6	5.6	320.0	0.11	0.09
4	9	74.2	31.6	54.2	54.2	31.2		25.4	112.6	4.7	525.7	0.23	0.17
4	10	75.3	49.4	61.3	37.3	33.4		24.6	134.3	5.6	359.7	0.25	0.18
4	11	66.8	39.8	53.5	63.8	39.0	0.06	34.0	136.8	5.7	482.4	0.19	0.14
4	12	72.6	33.1	54.4	54.7	35.5	0.01	28.4	132.3	5.5	518.9	0.22	0.17
4	13	75.9	43.2	61.3	33.5	30.3		24.8	154.4	6.4	609.3	0.30	0.22
4	14	77.9	49.0	67.0	25.6	29.7	0.01	29.4	145.4	6.1	331.6	0.27	0.19
4	15	83.0	50.9	68.0	23.7	28.0		23.8	149.4	6.2	366.1	0.32	0.22
4	16	64.6	42.8	56.6	27.5	22.7	0.01	41.9	358.0	14.9	567.3	0.35	0.24
4	17	77.0	30.9	55.2	38.7	26.1	0.01	37.6	201.6	8.4	639.7	0.35	0.24
4	18	68.8	34.8	49.9	51.6	30.3		38.4	212.1	8.8	583.7	0.28	0.20
4	19	40.1	26.8	34.4	71.4	26.1		12.4	111.8	4.7	219.5	0.07	0.05
4	20	44.1	33.2	36.6	89.3	33.7	0.01	34.0	141.8	5.9	88.3	0.05	0.04
4	21	58.8	28.6	44.5	54.4	25.3	0.05	49.3	211.6	8.8	674.3	0.22	0.17
4	22	69.6	27.4	51.3	34.1	20.4		30.7	195.8	8.2	654.9	0.30	0.22
4	23	77.6	36.4	60.9	24.0	21.5		40.2	219.8	9.2	677.6	0.38	0.27
4	24	66.2	31.1	47.4	45.5	25.3	0.01	35.7	215.2	9.0	672.6	0.28	0.20
4	25	57.9	27.9	43.5	41.4	21.5		13.4	115.9	4.8	465.5	0.17	0.13
4	26	63.7	33.9	48.6	62.7	36.5		18.9	115.4	4.8	356.2	0.15	0.12

TABLE B8
NCWCD WEATHER STATION DATA
LONGMONT SOUTH
2002

Date		Temperature			Relative Humidity	Dew Point	Precipitation Total	Wind			Solar Radiation	ASCE Calculation	
Month	Day	Max. (°F)	Min. (°F)	Average (°F)	Average (%)	Average (°F)	(inch)	Max (mph)	Total (miles)	Average (mph)	Total (Langl)	ET_r Alfalfa (inch)	ET_o Grass (inch)
4	27	68.0	41.5	51.3	70.3	39.6	0.04	38.3	186.2	7.8	454.4	0.22	0.16
4	28	73.1	29.5	53.4	54.1	31.6		43.0	255.8	10.7	689.9	0.33	0.23
4	29	77.7	36.1	59.5	40.0	33.0		20.5	140.8	5.9	663.8	0.30	0.22
4	30	75.3	37.2	57.4	51.8	39.0		21.6	131.2	5.5	680.6	0.26	0.20
5	1	52.9	32.7	43.2	89.7	40.9	0.01	22.4	174.4	7.3	108.6	0.05	0.04
5	2	59.8	32.9	43.1	81.3	36.8	0.04	15.1	85.8	3.6	472.9	0.13	0.11
5	3	72.0	34.4	56.1	41.1	29.4	0.03	29.0	226.0	9.4	690.3	0.32	0.23
5	4	69.5	36.2	53.3	57.5	37.6		23.6	101.5	4.2	550.7	0.20	0.16
5	5	79.1	37.5	61.5	38.4	31.5		24.7	133.8	5.6	649.0	0.30	0.23
5	6	82.7	40.8	64.4	29.7	28.9		28.6	127.2	5.3	615.8	0.32	0.24
5	7	66.6	41.0	53.6	70.9	44.0		22.6	106.7	4.4	527.5	0.17	0.14
5	8	67.1	36.9	51.9	59.6	36.8	0.01	27.3	212.8	8.9	591.9	0.24	0.18
5	9	63.1	27.4	45.4	41.8	22.3		14.6	90.4	3.8	688.1	0.21	0.17
5	10	59.9	35.0	50.2	48.1	30.8		14.7	104.9	4.4	359.7	0.15	0.12
5	11	57.3	41.6	48.5	87.5	44.7	0.32	22.6	141.6	5.9	171.9	0.08	0.06
5	12	56.2	39.5	45.6	81.7	39.5	0.16	16.4	124.6	5.2	367.9	0.12	0.10
5	13	71.7	34.7	54.3	56.0	36.1		15.2	78.3	3.3	728.8	0.23	0.19
5	14	75.1	39.8	56.5	57.7	40.2	0.03	38.3	108.9	4.5	326.3	0.19	0.14
5	15	76.4	44.2	60.0	54.4	42.6		32.2	136.7	5.7	463.7	0.24	0.18
5	16	52.9	43.6	46.9	93.7	45.1	0.15	18.3	116.2	4.8	93.6	0.05	0.04
5	17	59.6	45.1	51.7	86.8	47.2	0.02	10.4	62.6	2.6	316.5	0.10	0.09
5	18	70.7	40.1	56.6	79.0	49.5		15.3	100.7	4.2	638.3	0.19	0.17
5	19	68.6	44.6	56.7	75.9	48.8	0.01	15.6	133.1	5.5	677.6	0.20	0.17
5	20	62.8	46.6	52.5	88.0	49.1	0.01	11.8	96.6	4.0	311.9	0.11	0.09
5	21	85.7	44.1	61.1	60.3	42.5	0.06	38.6	221.6	9.2	533.3	0.40	0.27
5	22	67.5	42.0	56.9	24.3	20.1	0.01	37.6	329.5	13.7	757.7	0.40	0.28
5	23	62.9	38.6	49.5	60.1	35.2	0.62	23.7	167.5	7.0	505.5	0.20	0.16
5	24	52.4	32.4	40.3	95.0	38.9	0.65	13.0	69.4	2.9	333.3	0.08	0.08
5	25	72.3	38.3	54.7	70.6	43.6	0.01	12.6	76.5	3.2	558.3	0.19	0.16

TABLE B8
NCWCD WEATHER STATION DATA
LONGMONT SOUTH
2002

Date		Temperature			Relative Humidity	Dew Point	Precipitation Total	Wind			Solar Radiation	ASCE Calculation	
Month	Day	Max. (°F)	Min. (°F)	Average (°F)	Average (%)	Average (°F)	(inch)	Max (mph)	Total (miles)	Average (mph)	Total (Langl)	ET_r Alfalfa (inch)	ET_o Grass (inch)
5	26	77.4	43.2	62.3	49.5	41.3	0.01	19.4	106.0	4.4	606.1	0.25	0.20
5	27	79.5	45.4	62.7	55.0	45.0	0.03	26.2	131.4	5.5	642.1	0.28	0.22
5	28	82.3	48.3	67.2	47.8	44.8		26.6	108.1	4.5	715.4	0.29	0.24
5	29	84.4	51.5	69.5	47.1	46.8		15.2	80.2	3.3	581.1	0.25	0.21
5	30	90.1	50.7	74.3	44.8	49.4		28.6	96.6	4.0	729.0	0.31	0.26
5	31	90.5	56.0	74.2	46.4	51.0		27.4	104.7	4.4	633.9	0.31	0.25
6	1	83.3	53.3	69.0	57.8	52.9		33.4	95.6	4.0	418.2	0.21	0.17
6	2	90.6	50.7	72.8	42.1	44.9		18.6	130.9	5.5	689.7	0.36	0.28
6	3	73.3	50.6	62.3	72.2	52.5	0.34	26.2	159.3	6.6	528.9	0.21	0.17
6	4	64.8	48.2	55.1	87.4	50.9	0.17	12.0	69.7	2.9	252.4	0.09	0.08
6	5	76.2	43.4	61.5	68.5	48.6	0.02	13.7	84.2	3.5	572.4	0.20	0.18
6	6	86.9	49.6	69.2	51.4	48.6	0.03	26.2	109.2	4.5	600.1	0.29	0.23
6	7	91.9	50.9	72.5	49.4	50.1		32.0	139.0	5.8	545.5	0.33	0.25
6	8	84.5	49.3	67.9	66.1	56.1		14.2	99.0	4.1	539.8	0.23	0.19
6	9	95.2	53.0	75.0	41.0	48.1		15.7	130.5	5.4	570.4	0.36	0.27
6	10	79.8	52.7	65.1	43.1	40.7		19.6	160.1	6.7	498.2	0.31	0.23
6	11	79.1	45.4	63.9	55.3	45.8		15.6	85.4	3.6	702.4	0.25	0.22
6	12	81.3	49.6	66.3	46.1	43.3		16.9	95.6	4.0	722.3	0.29	0.24
6	13	73.9	47.6	62.6	54.4	45.7		14.4	91.8	3.8	640.6	0.23	0.19
6	14	80.6	48.7	65.4	52.8	47.0		15.9	88.7	3.7	637.2	0.25	0.21
6	15	80.3	51.1	65.2	60.2	49.5		23.2	105.7	4.4	394.6	0.21	0.17
6	16	83.7	49.0	66.7	63.9	52.1	0.01	23.4	106.7	4.4	647.0	0.27	0.22
6	17	94.9	50.6	74.8	38.4	42.4		23.8	105.2	4.4	645.7	0.35	0.27
6	18	97.1	58.3	78.8	23.5	36.2		14.3	93.9	3.9	696.5	0.37	0.28
6	19	88.4	57.0	72.6	44.8	48.4	0.27	25.7	163.3	6.8	577.5	0.36	0.27
6	20	82.1	56.2	69.0	74.0	59.5	0.03	27.2	106.5	4.4	510.4	0.21	0.18
6	21	89.6	59.5	74.3	51.7	54.6	0.03	32.7	156.1	6.5	508.9	0.32	0.24
6	22	92.5	57.4	72.8	61.3	56.8	0.01	24.1	93.4	3.9	532.0	0.28	0.22
6	23	93.2	57.2	76.9	36.7	45.6	0.01	22.3	121.1	5.0	745.0	0.38	0.30

TABLE B8
NCWCD WEATHER STATION DATA
LONGMONT SOUTH
2002

Date		Temperature			Relative Humidity	Dew Point	Precipitation Total	Wind			Solar Radiation	ASCE Calculation	
Month	Day	Max. (°F)	Min. (°F)	Average (°F)	Average (%)	Average (°F)	(inch)	Max (mph)	Total (miles)	Average (mph)	Total (Langl)	ET_r Alfalfa (inch)	ET_o Grass (inch)
6	24	96.2	54.7	77.7	35.6	45.5		21.2	102.3	4.3	717.3	0.36	0.29
6	25	91.2	56.2	73.9	44.8	49.8	0.01	37.7	135.8	5.7	630.6	0.35	0.27
6	26	93.0	51.4	72.7	50.5	50.3		23.4	97.8	4.1	692.1	0.33	0.26
6	27	96.6	55.1	76.5	38.5	46.5		26.1	121.7	5.1	583.3	0.37	0.28
6	28	94.9	54.9	76.5	36.9	45.5	0.01	37.2	141.7	5.9	651.5	0.40	0.30
6	29	99.2	54.5	79.3	32.9	43.7		15.6	86.0	3.6	695.5	0.35	0.28
6	30	95.3	57.8	77.4	29.1	41.3		15.6	101.6	4.2	624.7	0.35	0.27
7	1	100.0	58.4	80.5	32.5	45.3		11.2	75.5	3.1	649.9	0.33	0.26
7	2	98.2	61.0	79.0	31.9	42.9		16.9	98.1	4.1	559.5	0.35	0.26
7	3	89.7	61.6	75.1	39.7	48.5		22.6	109.9	4.6	486.6	0.30	0.23
7	4	91.5	55.5	75.4	43.6	49.2		21.2	121.8	5.1	662.4	0.34	0.27
7	5	89.7	57.6	74.4	54.2	54.5		15.3	114.4	4.8	690.3	0.32	0.26
7	6	85.6	61.6	72.2	59.7	56.2	0.01	34.1	151.3	6.3	475.9	0.28	0.22
7	7	93.7	58.0	77.4	45.5	52.7		15.6	81.4	3.4	607.2	0.29	0.24
7	8	94.8	58.9	77.2	47.6	53.6		19.2	103.3	4.3	630.2	0.33	0.26
7	9	92.9	63.3	78.3	38.9	49.8		18.1	100.3	4.2	675.2	0.34	0.27
7	10	84.9	65.4	73.8	56.8	57.5		22.3	121.3	5.1	367.6	0.24	0.18
7	11	87.0	58.5	72.3	50.5	51.5		17.6	113.4	4.7	711.3	0.32	0.26
7	12	94.1	54.8	74.9	42.5	46.0		13.7	71.9	3.0	735.3	0.32	0.26
7	13	93.6	52.9	76.1	32.3	42.1		21.6	89.9	3.7	669.1	0.33	0.26
7	14	95.3	57.1	77.9	32.1	42.4		18.1	97.9	4.1	711.1	0.36	0.28
7	15	96.6	57.2	79.1	31.1	43.6		17.2	104.9	4.4	712.2	0.37	0.29
7	16	97.4	57.8	78.8	30.9	42.2		19.2	94.8	4.0	705.1	0.36	0.28
7	17	97.0	56.1	78.3	28.2	40.3		16.7	84.5	3.5	682.4	0.34	0.27
7	18	97.1	59.8	78.6	29.4	41.8		16.9	97.8	4.1	685.2	0.37	0.28
7	19	97.2	59.2	80.0	30.2	43.8		14.8	86.2	3.6	690.2	0.34	0.27
7	20	96.6	63.7	79.3	35.7	48.4		28.1	119.2	5.0	627.6	0.38	0.28
7	21	86.9	63.6	73.6	51.2	53.4		21.5	111.5	4.6	600.3	0.30	0.24
7	22	81.9	56.4	69.0	66.1	56.1		14.0	81.9	3.4	446.0	0.20	0.17

TABLE B8
NCWCD WEATHER STATION DATA
LONGMONT SOUTH
2002

Date		Temperature			Relative Humidity	Dew Point	Precipitation Total	Wind			Solar Radiation	ASCE Calculation	
Month	Day	Max. (°F)	Min. (°F)	Average (°F)	Average (%)	Average (°F)	(inch)	Max (mph)	Total (miles)	Average (mph)	Total (Langl)	ET_r Alfalfa (inch)	ET_o Grass (inch)
7	23	87.4	58.9	73.3	49.6	51.9	0.02	26.6	112.1	4.7	504.0	0.28	0.22
7	24	98.1	55.9	79.7	35.3	45.1		27.0	112.0	4.7	661.5	0.37	0.28
7	25	90.3	62.8	74.6	40.2	47.8	0.01	26.8	133.0	5.5	360.8	0.31	0.22
7	26	91.7	54.8	74.1	43.1	45.8		37.9	194.9	8.1	591.5	0.42	0.30
7	27	90.7	56.4	76.1	29.3	39.9		32.1	123.7	5.2	534.7	0.34	0.25
7	28	87.7	60.9	74.3	34.6	44.0		19.4	115.1	4.8	572.8	0.32	0.24
7	29	96.4	52.8	76.8	26.6	36.8		17.9	114.8	4.8	688.2	0.38	0.29
7	30	98.2	59.1	80.2	24.6	37.7		25.1	112.3	4.7	675.6	0.39	0.29
7	31	101.3	58.4	82.4	24.1	38.1		18.3	87.9	3.7	594.4	0.34	0.26
8	1	78.6	58.1	67.0	34.7	37.6		26.0	150.7	6.3	429.9	0.31	0.22
8	2	85.1	52.5	69.3	40.0	43.5		22.4	102.6	4.3	508.7	0.27	0.21
8	3	89.0	60.6	72.7	56.7	54.8	0.01	26.2	93.3	3.9	451.4	0.25	0.19
8	4	86.8	57.3	71.7	61.1	56.4	0.02	21.3	106.3	4.4	438.4	0.23	0.18
8	5	87.4	60.0	71.0	66.1	57.9	0.15	28.2	121.2	5.0	477.1	0.26	0.20
8	6	89.8	55.9	70.9	58.0	53.5	0.02	22.9	105.0	4.4	520.3	0.28	0.21
8	7	88.7	54.8	70.8	57.7	53.2	0.01	23.9	105.4	4.4	537.5	0.27	0.21
8	8	90.4	51.9	71.3	52.2	49.2	0.01	21.9	100.8	4.2	536.5	0.28	0.22
8	9	84.7	52.6	68.1	52.5	48.5		17.2	97.8	4.1	631.3	0.27	0.22
8	10	93.6	54.2	72.9	35.3	41.7		14.5	97.7	4.1	631.4	0.33	0.25
8	11	96.0	54.0	77.3	24.1	34.1		22.3	100.0	4.2	656.1	0.35	0.26
8	12	74.8	54.8	63.5	51.1	44.5	0.01	31.1	182.6	7.6	416.3	0.27	0.19
8	13	75.9	44.2	62.2	46.0	38.9		17.7	85.9	3.6	609.6	0.23	0.19
8	14	94.7	45.5	73.2	30.7	34.0		28.0	119.5	5.0	643.3	0.37	0.27
8	15	85.1	53.2	68.5	43.6	44.3		21.1	114.9	4.8	588.7	0.29	0.22
8	16	101.0	48.7	75.5	35.5	39.3		33.0	142.7	5.9	593.3	0.44	0.31
8	17	78.9	47.0	64.5	31.6	32.5		17.5	107.6	4.5	558.7	0.27	0.20
8	18	96.2	48.9	67.9	37.0	37.6		31.6	122.7	5.1	366.2	0.36	0.24
8	19	85.0	43.9	67.2	39.4	41.6		18.4	97.4	4.1	475.7	0.25	0.19
8	20	86.3	55.9	70.3	56.2	51.9	0.06	22.2	89.4	3.7	435.6	0.23	0.18

TABLE B8
NCWCD WEATHER STATION DATA
LONGMONT SOUTH
2002

Date		Temperature			Relative Humidity	Dew Point	Precipitation Total	Wind			Solar Radiation	ASCE Calculation	
Month	Day	Max. (°F)	Min. (°F)	Average (°F)	Average (%)	Average (°F)	(inch)	Max (mph)	Total (miles)	Average (mph)	Total (Langl)	ET_r Alfalfa (inch)	ET_o Grass (inch)
8	21	87.2	58.8	68.1	56.1	50.5	0.16	32.4	122.4	5.1	373.7	0.27	0.19
8	22	82.0	50.4	64.9	60.0	49.3	0.02	28.5	106.8	4.5	427.0	0.22	0.17
8	23	89.7	48.2	68.3	48.6	44.3	0.08	51.4	120.4	5.0	435.7	0.29	0.21
8	24	80.5	54.5	66.2	63.9	53.0	0.01	21.8	141.9	5.9	519.8	0.24	0.19
8	25	90.0	57.3	71.4	52.1	50.2		15.9	89.7	3.7	557.6	0.27	0.21
8	26	92.3	51.4	72.7	37.0	41.8	0.01	23.4	105.1	4.4	564.7	0.31	0.23
8	27	79.6	57.8	67.2	62.7	53.2	0.01	22.4	150.2	6.3	362.4	0.22	0.17
8	28	75.9	57.0	65.5	69.3	54.8		23.2	119.4	5.0	309.3	0.16	0.13
8	29	74.8	51.3	62.4	75.0	53.7	0.04	26.5	112.1	4.7	363.9	0.16	0.13
8	30	88.1	47.5	68.7	50.4	43.9	0.01	19.6	110.0	4.6	542.4	0.28	0.21
8	31	92.3	55.3	73.7	32.1	37.8		15.6	84.5	3.5	539.8	0.28	0.21
9	1	90.8	56.4	75.1	23.2	32.8		21.5	109.6	4.6	417.0	0.30	0.21
9	2	85.3	51.5	69.4	35.5	40.1	0.01	17.8	114.4	4.8	564.9	0.29	0.21
9	3	86.5	48.0	69.1	42.9	43.5		21.6	92.6	3.9	430.6	0.23	0.18
9	4	91.0	55.5	74.6	30.2	39.0		19.8	107.6	4.5	477.3	0.29	0.21
9	5	95.6	50.1	75.1	27.1	35.2		16.2	87.6	3.6	518.7	0.29	0.21
9	6	92.7	51.8	73.9	31.5	39.8		19.7	110.8	4.6	463.9	0.30	0.22
9	7	90.8	55.0	74.1	39.4	46.1		18.1	106.8	4.5	444.1	0.27	0.20
9	8	83.7	54.7	70.5	51.7	51.0		22.9	133.1	5.5	342.8	0.23	0.17
9	9	72.3	57.9	63.8	73.8	54.9	0.02	18.9	104.7	4.4	235.9	0.13	0.10
9	10	68.8	55.5	60.4	79.2	53.5	0.32	14.6	108.2	4.5	272.4	0.12	0.10
9	11	71.1	50.1	59.3	80.7	52.8	0.15	23.9	85.1	3.5	363.2	0.13	0.11
9	12	74.1	53.3	61.0	82.0	54.8	0.26	28.3	82.9	3.5	363.1	0.14	0.11
9	13	67.7	50.6	58.5	79.9	51.8	0.04	15.6	85.1	3.5	240.7	0.10	0.08
9	14	76.4	52.2	64.6	47.4	42.6	0.01	16.6	131.0	5.5	515.5	0.24	0.18
9	15	85.4	43.0	64.0	48.8	39.3		14.4	67.2	2.8	528.7	0.21	0.17
9	16	86.6	46.1	66.2	38.9	36.8		14.2	75.5	3.1	507.0	0.23	0.17
9	17	81.6	47.4	66.4	35.4	35.7	0.04	43.7	261.6	10.9	329.3	0.37	0.24
9	18	69.5	47.5	58.8	49.7	39.2		29.9	168.0	7.0	277.1	0.20	0.14

TABLE B8
NCWCD WEATHER STATION DATA
LONGMONT SOUTH
2002

Date		Temperature			Relative Humidity	Dew Point	Precipitation Total	Wind			Solar Radiation	ASCE Calculation	
Month	Day	Max. (°F)	Min. (°F)	Average (°F)	Average (%)	Average (°F)	(inch)	Max (mph)	Total (miles)	Average (mph)	Total (Langl)	ET_r Alfalfa (inch)	ET_o Grass (inch)
9	19	70.0	39.4	54.9	54.9	36.4		13.6	95.1	4.0	504.7	0.18	0.14
9	20	82.0	43.0	64.1	36.6	33.4		19.2	109.1	4.5	500.9	0.25	0.18
9	21	62.7	42.0	51.6	59.5	37.1		26.4	131.5	5.5	466.5	0.17	0.13
9	22	69.2	44.2	53.5	55.5	37.1		11.1	70.4	2.9	471.6	0.16	0.12
9	23	71.4	40.8	55.0	44.1	31.9		16.0	114.3	4.8	480.3	0.21	0.15
9	24	85.6	36.3	61.4	42.0	32.6		19.2	92.9	3.9	438.1	0.24	0.17
9	25	60.0	40.4	51.1	61.1	37.8	0.06	15.2	106.0	4.4	351.4	0.12	0.10
9	26	64.5	43.9	50.3	84.9	45.7	0.01	9.3	88.2	3.7	242.6	0.10	0.08
9	27	74.6	35.4	54.1	67.9	41.7	0.04	45.7	100.5	4.2	292.8	0.16	0.11
9	28	72.1	45.3	54.7	65.8	42.8	0.01	28.7	91.6	3.8	284.3	0.15	0.11
9	29	78.8	39.0	58.5	55.2	38.7		27.6	139.3	5.8	450.8	0.24	0.17
9	30	77.0	46.3	63.9	27.4	28.4		26.6	138.9	5.8	460.3	0.26	0.18
10	1	62.1	42.2	51.9	60.6	38.3	0.27	19.3	160.8	6.7	308.8	0.15	0.11
10	2	44.5	36.7	39.7	94.5	38.3	0.08	11.9	129.5	5.4	68.6	0.03	0.03
10	3	51.2	38.2	42.8	86.5	38.9	0.03	31.0	121.9	5.1	181.4	0.07	0.05
10	4	62.7	33.4	49.5	59.9	34.0		16.4	113.8	4.7	388.4	0.14	0.10
10	5	69.1	38.8	55.3	47.5	33.2		34.9	182.8	7.6	408.6	0.22	0.15
10	6	62.7	38.5	51.5	54.7	34.7		30.8	144.5	6.0	409.1	0.16	0.11
10	7	73.6	32.8	52.5	61.0	36.4		12.3	75.5	3.1	418.1	0.15	0.11
10	8	72.4	39.7	55.1	53.8	36.6		23.4	135.0	5.6	408.5	0.20	0.14
10	9	69.2	42.7	53.3	68.3	41.9	0.01	10.2	62.8	2.6	397.9	0.12	0.09
10	10	78.5	40.0	60.1	40.4	30.7		20.8	96.7	4.0	389.2	0.20	0.14
10	11	80.8	41.5	61.8	30.1	27.0	0.01	33.0	182.4	7.6	381.1	0.31	0.20
10	12	51.6	29.1	40.5	66.0	29.2		14.8	105.4	4.4	296.9	0.09	0.07
10	13	69.0	27.6	46.3	53.0	27.9		10.2	72.3	3.0	402.8	0.14	0.10
10	14	61.9	28.6	45.5	43.4	21.6		15.2	98.8	4.1	394.5	0.14	0.10
10	15	60.7	28.4	43.0	45.8	21.3		13.3	79.5	3.3	390.1	0.13	0.09
10	16	59.0	32.6	45.4	42.2	22.8		31.6	119.6	5.0	368.0	0.15	0.10
10	17	66.4	25.4	45.1	47.1	23.5		12.0	73.0	3.0	379.4	0.13	0.09

TABLE B8
NCWCD WEATHER STATION DATA
LONGMONT SOUTH
2002

Date		Temperature			Relative Humidity	Dew Point	Precipitation Total	Wind			Solar Radiation	ASCE Calculation	
Month	Day	Max. (°F)	Min. (°F)	Average (°F)	Average (%)	Average (°F)	(inch)	Max (mph)	Total (miles)	Average (mph)	Total (Langl)	ET_r Alfalfa (inch)	ET_o Grass (inch)
10	18	71.2	34.8	51.7	31.6	19.3		18.7	111.4	4.6	381.6	0.20	0.13
10	19	65.2	28.4	45.9	43.2	23.0		10.1	64.0	2.7	373.2	0.12	0.09
10	20	70.4	27.4	49.2	35.5	19.1		12.8	75.9	3.2	280.5	0.15	0.10
10	21	61.2	32.6	45.5	47.3	26.1		11.5	78.5	3.3	352.8	0.12	0.08
10	22	43.2	26.5	32.6	84.1	28.1		18.8	132.5	5.5	104.3	0.05	0.04
10	23	31.1	25.1	27.7	95.6	26.7	0.04	10.8	109.8	4.6	89.9	0.02	0.02
10	24	33.3	24.4	28.7	96.5	27.9	0.02	6.9	58.2	2.4	76.0	0.02	0.02
10	25	56.5	28.5	38.9	79.1	31.6	0.01	12.2	80.1	3.3	256.5	0.08	0.06
10	26	56.9	27.3	42.9	62.1	29.6		15.0	84.3	3.5	303.7	0.09	0.06
10	27	48.7	30.9	42.2	83.6	37.6		14.7	116.7	4.9	124.7	0.04	0.03
10	28	61.1	25.1	42.9	65.2	29.3	0.02	20.5	116.4	4.8	282.3	0.12	0.08
10	29	35.7	17.9	26.5	97.6	26.4	0.25	25.9	222.9	9.3	140.9	0.02	0.02
10	30	20.1	14.3	17.2	89.0	14.5	0.05	10.7	95.6	4.0	182.9	0.02	0.02
10	31	19.6	12.7	16.9	94.6	15.7	0.25	9.9	88.1	3.7	158.4	0.01	0.01
11	1	28.6	15.0	19.7	94.8	18.6	0.04	9.8	48.0	2.0	153.5		
11	2	33.8	18.9	24.9	91.5	22.9	0.09	8.3	52.4	2.2	227.9		
11	3	40.3	15.3	26.5	82.1	21.5	0.03	8.3	60.3	2.5	206.3		
11	4	38.0	15.4	27.5	76.3	20.8		14.4	60.3	2.5	199.1		
11	5	55.2	20.6	38.3	52.7	20.7		15.1	80.9	3.4	316.4		
11	6	55.9	25.3	39.3	68.0	29.0		16.4	87.8	3.7	304.5		
11	7	69.9	23.3	47.8	41.3	20.4	0.01	27.4	166.9	7.0	192.1		
11	8	65.4	38.3	53.6	34.9	26.0	0.02	47.6	233.4	9.7	239.1		
11	9	59.0	36.7	47.5	47.4	28.4		26.7	225.9	9.4	184.7		
11	10	52.7	30.2	42.5	32.4	14.3		37.0	171.2	7.1	225.2		
11	11	47.0	23.0	34.4	58.5	20.8		18.6	103.0	4.3	206.3		
11	12	55.3	17.7	35.8	48.7	15.0		12.1	70.2	2.9	288.8		
11	13	58.2	29.1	43.1	51.2	25.1		22.6	95.4	4.0	159.3		
11	14	47.9	29.0	37.9	77.4	30.8	0.01	12.4	88.6	3.7	229.4		
11	15	45.7	23.3	35.6	72.7	27.3		18.9	105.5	4.4	216.7		

TABLE B8
NCWCD WEATHER STATION DATA
LONGMONT SOUTH
2002

Date		Temperature			Relative Humidity	Dew Point	Precipitation Total	Wind			Solar Radiation	ASCE Calculation	
Month	Day	Max. (°F)	Min. (°F)	Average (°F)	Average (%)	Average (°F)	(inch)	Max (mph)	Total (miles)	Average (mph)	Total (Langl)	ET_r Alfalfa (inch)	ET_o Grass (inch)
11	16	58.1	18.1	39.7	47.8	16.1	0.01	29.7	167.9	7.0	253.5		
11	17	62.1	35.2	50.2	22.9	12.3		36.0	145.0	6.0	257.3		
11	18	56.4	30.6	44.2	35.0	16.6		20.6	164.7	6.9	255.6		
11	19	59.4	35.6	46.6	28.7	15.1		26.9	180.0	7.5	260.0		
11	20	63.5	28.1	44.6	48.3	24.3		11.3	82.9	3.5	258.5		
11	21	61.5	30.9	45.5	54.6	28.8		12.9	84.0	3.5	253.5		
11	22	71.0	24.8	48.5	46.5	24.0		34.9	202.7	8.4	181.2		
11	23	49.1	29.2	38.0	65.4	27.4		28.6	183.5	7.6	189.6		
11	24	33.3	21.5	24.5	92.0	22.4	0.24	25.9	123.6	5.2	189.0		
11	25	35.9	10.2	21.0	94.4	20.0	0.06	11.0	81.8	3.4	242.3		
11	26	27.9	1.2	15.5	83.1	11.4		8.4	64.3	2.7	237.7		
11	27	46.0	9.0	26.3	70.5	17.3		9.1	67.2	2.8	201.8		
11	28	55.1	17.4	35.0	69.3	25.8		9.7	61.3	2.6	238.7		
11	29	56.6	28.1	40.8	62.0	28.4		14.9	92.0	3.8	232.5		
11	30	48.8	24.9	35.4	59.8	21.8		12.1	85.5	3.6	239.2		
12	1	60.5	24.3	41.0	58.3	25.9		19.4	115.1	4.8	215.8		
12	2	60.6	28.4	44.2	50.7	25.5		14.0	108.1	4.5	232.7		
12	3	33.7	26.0	29.5	92.5	27.6		8.5	67.8	2.8	50.6		
12	4	32.3	23.6	29.8	96.3	28.9		9.3	59.4	2.5	28.3		
12	5	47.9	24.1	34.5	74.7	26.3		13.2	99.2	4.1	215.6		
12	6	51.6	17.9	32.2	61.0	18.5		11.3	67.6	2.8	230.1		
12	7	47.1	21.1	32.0	59.3	18.4		9.1	55.8	2.3	182.9		
12	8	44.0	21.5	31.7	61.6	19.6		9.9	75.2	3.1	178.1		
12	9	55.0	16.7	33.7	56.8	17.9		7.4	62.1	2.6	224.3		
12	10	59.4	17.2	35.4	41.6	11.1		16.9	70.7	2.9	224.8		
12	11	50.6	21.8	34.5	43.1	13.0	0.01	20.3	118.7	4.9	191.7		
12	12	42.0	17.6	30.6	51.2	13.4		13.2	85.2	3.5	211.5		
12	13	59.5	20.6	37.6	43.6	15.3	0.01	27.3	124.6	5.2	220.3		
12	14	55.3	24.1	37.5	49.4	19.8		17.5	80.6	3.4	160.2		

TABLE B8
NCWCD WEATHER STATION DATA
LONGMONT SOUTH
2002

Date		Temperature			Relative Humidity	Dew Point	Precipitation Total	Wind			Solar Radiation	ASCE Calculation	
Month	Day	Max. (°F)	Min. (°F)	Average (°F)	Average (%)	Average (°F)	(inch)	Max (mph)	Total (miles)	Average (mph)	Total (Langl)	ET_r Alfalfa (inch)	ET_o Grass (inch)
12	15	62.9	26.0	44.9	36.9	17.4		34.0	186.1	7.8	111.8		
12	16	50.8	23.7	38.4	39.8	15.3		13.3	104.4	4.3	224.1		
12	17	51.0	26.6	38.6	55.2	22.7		19.0	122.2	5.1	128.8		
12	18	43.8	20.0	31.3	72.8	23.0		19.2	114.1	4.8	173.6		
12	19	37.6	12.5	27.6	48.7	9.6		30.3	169.3	7.1	216.7		
12	20	39.7	10.9	24.7	51.6	8.7		14.2	87.4	3.6	195.1		
12	21	42.7	18.1	30.0	48.1	11.8		14.2	101.5	4.2	205.6		
12	22	40.5	13.6	26.9	61.2	14.4		12.9	85.0	3.5	221.4		
12	23	31.4	11.2	21.6	76.6	15.2		15.1	64.4	2.7	110.8		
12	24	30.0	9.3	18.3	83.2	14.0		9.0	59.5	2.5	152.2		
12	25	36.4	8.1	19.6	68.9	10.1		10.0	65.8	2.7	189.1		
12	26	41.6	4.5	24.9	48.0	5.2		29.5	175.9	7.3	222.0		
12	27	55.9	32.4	45.7	26.5	13.1		36.6	301.6	12.6	180.6		
12	28	64.5	30.3	44.8	35.2	17.5		31.0	143.8	6.0	137.8		
12	29	61.5	26.7	45.1	29.6	12.0		37.9	287.1	12.0	200.1		
12	30	48.8	19.7	35.7	33.7	8.2		20.9	125.1	5.2	220.5		
12	31	56.5	16.6	32.1	43.1	11.4		31.7	107.7	4.5	176.6		
							8.18						**41.84**

TABLE B9
NCWCD WEATHER STATION DATA
LONGMONT SOUTH
2001

Date		Temperature			Relative Humidity	Dew Point	Precipitation Total	Wind			Solar Radiation	ASCE Calculation	
Month	Day	Max. (°F)	Min. (°F)	Average (°F)	Average (%)	Average (°F)	(inch)	Max (mph)	Total (miles)	Average (mph)	Total (Langl)	ET_r Alfalfa (inch)	ET_o Grass (inch)
1	1	31.4	9.2	18.9	95.1	18.2		10.6	60.7	2.5	130.4		
1	2	45.6	14.1	28.7	68.6	17.9		17.4	94.2	3.9	231.7		
1	3	59.3	21.8	37.5	48.8	18.5	0.01	18.6	85.1	3.5	227.3		
1	4	68.9	25.4	45.4	39.2	16.8	0.03	41.0	180.5	7.5	203.7		
1	5	59.9	21.8	42.9	47.5	22.4		21.9	110.2	4.6	238.0		
1	6	57.1	28.9	46.4	40.5	21.8		29.5	176.9	7.4	150.7		
1	7	43.4	16.6	30.9	64.9	19.3		15.4	82.6	3.4	244.5		
1	8	56.0	11.3	30.3	50.2	9.9		12.7	59.9	2.5	251.4		
1	9	43.3	12.8	28.2	52.2	12.2		10.6	57.1	2.4	218.8		
1	10	58.4	21.2	39.1	40.0	16.3		19.5	122.4	5.1	223.7		
1	11	51.9	18.9	33.3	52.3	16.4		8.8	74.1	3.1	247.9		
1	12	52.1	14.1	32.3	51.2	15.4		14.3	83.6	3.5	254.9		
1	13	47.2	23.8	35.2	49.4	18.0		24.7	143.5	6.0	134.0		
1	14	42.4	15.0	27.4	50.3	10.4		21.0	97.5	4.1	153.6		
1	15	35.8	9.7	23.8	65.6	13.7	0.01	15.9	83.2	3.5	199.0		
1	16	24.6	7.2	19.6	98.6	19.5	0.15	11.7	82.8	3.5	184.2		
1	17	26.9	-4.4	11.3	91.6	10.6	0.01	10.3	26.2	1.1	247.1		
1	18	40.7	12.1	25.1	75.2	17.7		13.6	84.0	3.5	259.9		
1	19	38.8	5.4	20.0	80.1	14.7		6.7	40.0	1.7	270.1		
1	20	45.0	15.1	29.5	74.9	22.2		15.1	81.6	3.4	189.3		
1	21	45.8	14.6	28.7	67.1	17.9		8.7	41.1	1.7	282.4		
1	22	42.9	15.5	29.3	64.3	18.1		10.0	48.7	2.0	113.7		
1	23	39.1	21.9	28.4	84.2	24.2		10.2	57.4	2.4	199.4		
1	24	40.8	20.2	29.6	78.2	23.5		12.3	80.3	3.3	264.3		
1	25	42.4	18.2	31.1	70.8	21.0	0.02	21.6	119.3	5.0	142.3		
1	26	39.6	23.1	31.4	60.3	19.0		15.7	139.8	5.8	210.2		
1	27	30.5	19.8	25.8	87.1	22.4	0.06	11.6	91.4	3.8	104.2		
1	28	25.5	21.5	23.0	100.2	22.9	0.15	13.5	112.8	4.7	40.2		
1	29	43.4	22.5	30.2	77.4	22.8	0.09	13.5	113.1	4.7	174.6		

TABLE B9
NCWCD WEATHER STATION DATA
LONGMONT SOUTH
2001

Date		Temperature			Relative Humidity	Dew Point	Precipitation Total	Wind			Solar Radiation	ASCE Calculation	
Month	Day	Max. (°F)	Min. (°F)	Average (°F)	Average (%)	Average (°F)	(inch)	Max (mph)	Total (miles)	Average (mph)	Total (Langl)	ET_r Alfalfa (inch)	ET_o Grass (inch)
1	30	36.4	23.1	30.0	56.0	15.8		28.3	200.8	8.4	216.2		
1	31	37.8	7.7	22.0	59.0	9.2		13.0	85.6	3.6	312.5		
2	1	41.3	9.0	23.8	61.4	11.8		12.0	90.8	3.8	312.0		
2	2	49.9	16.1	34.9	64.0	23.6	0.02	31.3	144.1	6.0	271.9		
2	3	51.2	27.9	41.0	62.2	27.9	0.02	41.4	221.8	9.2	157.2		
2	4	46.3	24.0	33.0	70.3	24.2		20.0	97.6	4.1	310.7		
2	5	60.4	26.1	44.4	57.0	27.4	0.01	38.4	257.9	10.7	329.3		
2	6	39.4	21.6	29.6	93.4	27.9		10.7	61.4	2.6	234.7		
2	7	30.0	16.2	24.1	101.4	24.3		12.4	110.5	4.6	34.0		
2	8	16.5	7.9	11.4	96.5	10.7	0.09	9.4	40.5	1.7	130.0		
2	9	20.8	-9.4	7.7	81.9	3.7	0.01	8.3	24.9	1.0	302.9		
2	10	31.0	-0.8	15.1	81.8	11.8		10.6	56.4	2.4	348.1		
2	11	47.5	8.4	28.0	68.5	17.5	0.02	28.1	187.5	7.8	309.0		
2	12	42.7	18.6	31.0	69.5	22.1		9.6	88.7	3.7	348.8		
2	13	45.7	19.2	30.7	79.4	24.7	0.04	23.5	113.0	4.7	337.2		
2	14	19.3	4.7	13.1	92.1	11.4	0.07	10.7	81.1	3.4	280.0		
2	15	38.7	3.6	20.0	84.2	17.0		9.4	57.8	2.4	368.3		
2	16	24.9	19.0	22.3	97.7	21.7		10.9	80.2	3.3	98.7		
2	17	38.9	23.0	27.9	94.5	26.5		11.5	64.9	2.7	285.5		
2	18	56.5	23.7	37.6	72.5	28.1	0.01	19.1	100.7	4.2	168.0		
2	19	49.8	28.3	38.3	74.9	30.8		14.1	96.9	4.0	336.9		
2	20	46.6	23.8	32.2	94.3	30.6		18.4	111.4	4.6	319.4		
2	21	49.8	28.0	35.5	89.7	32.2		12.2	89.5	3.7	322.1		
2	22	53.4	25.1	38.8	74.8	30.5	0.01	17.6	127.2	5.3	316.7		
2	23	37.2	27.4	33.6	94.2	32.1		11.2	111.5	4.6	134.0		
2	24	41.5	28.4	34.5	86.3	30.6		17.6	122.9	5.1	245.5		
2	25	54.8	26.0	40.0	42.1	17.3	0.01	23.1	149.8	6.2	421.8		
2	26	40.3	23.6	31.3	81.5	25.9		18.2	146.8	6.1	266.6		
2	27	24.0	16.5	20.0	94.5	18.7	0.05	12.4	116.8	4.9	198.6		

TABLE B9
NCWCD WEATHER STATION DATA
LONGMONT SOUTH
2001

Date		Temperature			Relative Humidity	Dew Point	Precipitation Total	Wind			Solar Radiation	ASCE Calculation	
Month	Day	Max. (°F)	Min. (°F)	Average (°F)	Average (%)	Average (°F)	(inch)	Max (mph)	Total (miles)	Average (mph)	Total (Langl)	ET_r Alfalfa (inch)	ET_o Grass (inch)
2	28	38.2	18.4	26.9	81.0	22.0		8.3	53.0	2.2	323.0		
3	1	56.2	23.2	40.0	56.9	22.7	0.02	22.5	127.7	5.3	356.0	0.13	0.09
3	2	52.6	20.5	36.6	60.2	21.8		13.6	85.8	3.6	434.5	0.11	0.08
3	3	50.5	22.8	37.2	59.2	22.7		20.0	120.7	5.0	422.7	0.11	0.08
3	4	53.3	20.0	36.5	61.9	23.0		14.9	78.0	3.3	444.3	0.10	0.08
3	5	64.2	21.1	44.0	51.3	24.8		28.8	87.3	3.6	333.9	0.13	0.10
3	6	59.2	35.5	47.6	52.3	30.0		13.5	78.1	3.3	279.0	0.11	0.08
3	7	56.4	29.3	44.2	68.2	33.7		18.6	129.9	5.4	394.5	0.11	0.09
3	8	59.5	26.3	43.8	63.4	30.2		14.9	82.2	3.4	453.0	0.12	0.09
3	9	63.6	28.0	48.0	50.3	27.8		19.6	90.1	3.8	366.7	0.14	0.10
3	10	43.2	27.7	34.2	93.6	32.0	0.28	19.9	122.1	5.1	97.0	0.04	0.03
3	11	28.3	14.5	25.6	100.8	25.7	0.19	11.9	103.6	4.3	232.8	0.01	0.02
3	12	52.3	15.3	35.1	69.0	24.1	0.03	24.8	146.3	6.1	456.4	0.12	0.09
3	13	58.1	29.9	44.2	53.9	27.5		23.2	149.3	6.2	429.7	0.16	0.11
3	14	54.5	32.0	42.0	42.6	20.4	0.02	38.1	299.2	12.5	294.3	0.21	0.14
3	15	45.0	24.6	33.6	59.2	19.7		24.6	196.5	8.2	399.2	0.12	0.09
3	16	45.3	19.5	32.4	72.3	23.2		19.2	91.7	3.8	390.6	0.08	0.07
3	17	37.6	27.5	32.1	94.3	30.5	0.11	15.6	81.4	3.4	253.4	0.04	0.04
3	18	49.4	23.4	35.0	83.9	29.5	0.06	27.2	114.8	4.8	338.8	0.09	0.07
3	19	64.1	22.0	44.4	56.1	26.2		15.6	82.2	3.4	508.0	0.15	0.12
3	20	73.0	34.6	53.7	48.7	33.2		26.7	138.9	5.8	320.1	0.21	0.14
3	21	62.2	37.4	50.1	69.8	40.0	0.01	17.3	101.7	4.2	330.6	0.12	0.09
3	22	63.9	35.2	48.3	76.9	39.9	0.02	24.3	118.4	4.9	499.5	0.15	0.12
3	23	64.0	32.7	44.0	73.0	34.6		24.9	144.4	6.0	327.7	0.16	0.11
3	24	35.4	30.7	32.5	99.4	32.1		11.8	118.6	4.9	101.6	0.02	0.02
3	25	35.0	30.0	32.0	98.9	31.4	0.32	9.2	59.8	2.5	86.6	0.02	0.02
3	26	43.9	28.6	33.5	97.6	32.6	0.07	11.1	47.6	2.0	284.6	0.06	0.05
3	27	56.8	32.1	40.8	80.5	33.7	0.02	24.1	113.4	4.7	420.7	0.13	0.10
3	28	52.4	25.9	39.0	78.4	32.0		14.2	83.4	3.5	330.7	0.09	0.07

TABLE B9
NCWCD WEATHER STATION DATA
LONGMONT SOUTH
2001

Date		Temperature			Relative Humidity	Dew Point	Precipitation Total	Wind			Solar Radiation	ASCE Calculation	
Month	Day	Max. (°F)	Min. (°F)	Average (°F)	Average (%)	Average (°F)	(inch)	Max (mph)	Total (miles)	Average (mph)	Total (Langl)	ET_r Alfalfa (inch)	ET_o Grass (inch)
3	29	46.9	27.5	37.5	92.8	35.5	0.02	15.7	114.7	4.8	205.1	0.05	0.04
3	30	59.8	28.5	42.0	70.5	30.0	0.04	32.2	213.7	8.9	555.8	0.19	0.14
3	31	50.5	27.2	36.9	79.3	29.9	0.04	12.7	97.8	4.1	561.1	0.12	0.10
4	1	70.1	28.0	52.3	51.1	30.1	0.04	33.1	235.5	9.8	453.6	0.26	0.18
4	2	67.1	35.6	51.8	58.6	36.4		17.3	83.8	3.5	375.8	0.15	0.11
4	3	73.0	42.7	55.4	64.7	42.4		24.7	134.2	5.6	515.6	0.22	0.16
4	4	60.1	40.7	50.0	86.4	45.5		12.3	97.7	4.1	371.3	0.10	0.09
4	5	62.0	42.7	51.2	83.7	45.9		10.4	66.0	2.8	311.9	0.10	0.08
4	6	58.3	41.5	48.9	77.4	41.6	0.01	32.1	166.6	6.9	240.2	0.11	0.08
4	7	64.3	38.6	52.6	36.4	25.9		41.7	162.7	6.8	476.3	0.23	0.16
4	8	61.3	29.3	45.6	60.1	31.4		28.1	181.4	7.6	490.4	0.18	0.14
4	9	63.3	27.8	48.3	53.4	30.2		36.1	180.8	7.5	571.8	0.21	0.15
4	10	42.5	32.4	37.8	90.4	35.0	0.19	15.3	138.0	5.8	123.3	0.04	0.03
4	11	42.8	32.4	37.0	84.1	31.9	0.80	39.9	341.9	14.2	437.4	0.09	0.07
4	12	49.1	30.7	39.1	78.3	32.7		10.7	88.7	3.7	521.3	0.11	0.10
4	13	57.2	31.4	44.6	57.4	29.0		19.6	130.7	5.4	594.1	0.17	0.14
4	14	62.9	29.0	45.7	60.5	31.3	0.01	40.9	171.4	7.1	616.2	0.21	0.16
4	15	61.3	29.9	45.7	61.7	32.3		18.8	140.5	5.9	620.5	0.19	0.15
4	16	44.2	31.3	37.5	74.9	30.3		27.8	140.2	5.8	221.3	0.08	0.06
4	17	62.0	36.3	46.7	72.9	37.7		10.5	65.0	2.7	605.7	0.15	0.13
4	18	80.4	36.2	58.1	53.8	35.7		18.0	117.9	4.9	547.2	0.27	0.20
4	19	75.4	54.4	66.0	22.2	25.5		41.7	275.9	11.5	574.1	0.42	0.29
4	20	60.0	35.2	50.0	57.9	35.6	0.06	30.0	165.1	6.9	371.5	0.15	0.12
4	21	48.2	32.5	40.7	94.1	39.0	0.53	22.9	187.0	7.8	148.5	0.04	0.04
4	22	36.3	31.5	33.3	99.7	32.9	0.44	27.5	272.7	11.4	195.1	0.03	0.03
4	23	58.9	26.0	43.1	68.4	31.5		16.7	96.1	4.0	627.2	0.16	0.13
4	24	64.3	33.8	50.1	64.7	37.6		16.1	93.4	3.9	638.4	0.18	0.15
4	25	69.8	35.2	54.1	63.1	40.1		10.7	78.5	3.3	671.5	0.20	0.17
4	26	74.7	39.2	59.3	55.2	41.0		12.6	81.9	3.4	673.0	0.22	0.19

TABLE B9
NCWCD WEATHER STATION DATA
LONGMONT SOUTH
2001

Date		Temperature			Relative Humidity	Dew Point	Precipitation Total	Wind			Solar Radiation	ASCE Calculation	
Month	Day	Max. (°F)	Min. (°F)	Average (°F)	Average (%)	Average (°F)	(inch)	Max (mph)	Total (miles)	Average (mph)	Total (Langl)	ET_r Alfalfa (inch)	ET_o Grass (inch)
4	27	78.7	41.2	60.6	57.5	43.8		16.5	93.7	3.9	659.6	0.24	0.20
4	28	74.0	40.9	59.9	60.7	45.3		21.0	116.4	4.8	483.7	0.20	0.16
4	29	77.7	42.7	63.3	46.9	40.9		27.8	116.8	4.9	561.6	0.25	0.19
4	30	74.2	42.5	61.0	47.7	39.6		21.9	112.6	4.7	553.5	0.23	0.18
5	1	84.5	52.2	68.4	35.6	38.1	0.01	28.4	196.4	8.2	619.0	0.39	0.28
5	2	58.4	32.5	35.7	99.0	35.0	0.46	25.7	152.8	6.4	102.4	0.12	0.08
5	3	38.2	32.3	34.9	101.8	34.9	0.48	11.0	127.2	5.3	203.9	0.04	0.04
5	4	41.4	35.2	38.2	101.1	38.1	0.72	12.7	147.4	6.1	93.7	0.02	0.02
5	5	49.8	38.8	44.0	97.3	43.3	0.58	25.0	160.0	6.7	125.8	0.04	0.04
5	6	60.3	37.9	50.7	74.3	42.8	0.02	23.1	157.1	6.5	558.5	0.15	0.13
5	7	62.8	39.8	51.1	71.0	41.7		18.7	109.0	4.5	707.0	0.19	0.16
5	8	73.4	38.4	58.6	59.1	42.3		21.7	113.9	4.7	716.0	0.24	0.20
5	9	78.8	40.1	59.4	56.0	42.4	0.02	36.2	110.2	4.6	452.6	0.23	0.17
5	10	81.2	47.5	62.2	53.8	44.0		25.6	141.7	5.9	412.2	0.27	0.19
5	11	70.1	49.1	57.0	78.2	49.8		22.7	115.9	4.8	535.4	0.19	0.16
5	12	81.3	43.3	63.6	59.9	47.0		10.0	62.9	2.6	723.0	0.24	0.21
5	13	84.3	45.4	66.9	51.9	47.1		14.0	71.7	3.0	690.2	0.26	0.22
5	14	81.5	49.4	65.6	58.3	50.1		23.3	103.7	4.3	564.4	0.24	0.20
5	15	84.6	49.6	69.6	44.8	45.9		25.7	161.8	6.7	630.6	0.33	0.25
5	16	80.8	59.0	67.9	51.6	49.4		20.3	105.4	4.4	499.0	0.25	0.20
5	17	62.9	46.2	55.1	83.5	49.9	0.10	19.0	109.5	4.6	224.4	0.09	0.08
5	18	75.2	45.0	59.7	73.8	49.2	0.01	17.9	75.8	3.2	616.0	0.20	0.18
5	19	66.2	50.8	58.7	80.2	52.5		14.2	92.6	3.9	366.3	0.13	0.11
5	20	75.0	32.8	50.1	81.6	43.5	0.11	41.7	195.9	8.2	533.5	0.25	0.18
5	21	58.0	29.6	44.8	59.8	29.6		18.9	91.8	3.8	619.6	0.17	0.14
5	22	75.5	36.1	57.4	50.9	37.7		18.1	109.2	4.5	586.2	0.24	0.19
5	23	79.5	39.0	61.5	53.2	41.5	0.01	38.4	133.7	5.6	635.8	0.28	0.22
5	24	75.8	37.4	58.9	50.1	38.2		24.3	131.8	5.5	600.2	0.26	0.20
5	25	71.3	34.4	55.3	68.3	44.1		12.9	70.6	2.9	615.1	0.19	0.16

TABLE B9
NCWCD WEATHER STATION DATA
LONGMONT SOUTH
2001

Date		Temperature			Relative Humidity	Dew Point	Precipitation Total	Wind			Solar Radiation	ASCE Calculation	
Month	Day	Max. (°F)	Min. (°F)	Average (°F)	Average (%)	Average (°F)	(inch)	Max (mph)	Total (miles)	Average (mph)	Total (Langl)	ET_r Alfalfa (inch)	ET_o Grass (inch)
5	26	76.4	42.3	60.7	70.5	50.1		12.3	72.8	3.0	490.2	0.18	0.15
5	27	75.6	53.4	62.3	76.7	54.2		19.7	118.6	4.9	559.2	0.21	0.18
5	28	69.7	46.1	58.7	88.2	54.9	0.02	18.0	95.4	4.0	300.6	0.11	0.09
5	29	77.3	51.9	62.1	76.1	53.4	0.03	28.6	97.0	4.0	558.4	0.21	0.18
5	30	66.4	48.3	57.7	84.2	52.8	0.02	17.1	114.1	4.8	352.3	0.12	0.11
5	31	77.1	41.5	60.8	73.6	50.8	0.01	16.8	85.7	3.6	668.9	0.22	0.19
6	1	80.9	47.6	65.9	60.0	49.5		13.9	85.0	3.5	711.0	0.26	0.22
6	2	88.7	45.1	66.9	60.0	50.7		16.7	84.3	3.5	629.1	0.27	0.22
6	3	67.1	54.3	58.9	91.0	56.1	0.05	20.7	138.8	5.8	206.8	0.10	0.08
6	4	61.1	48.0	54.1	100.1	53.7	0.27	16.8	138.7	5.8	219.9	0.06	0.06
6	5	75.1	41.7	59.2	76.9	50.5	0.01	14.8	73.9	3.1	673.0	0.21	0.19
6	6	82.0	45.0	64.5	68.6	52.4		13.2	92.8	3.9	721.0	0.26	0.22
6	7	82.2	53.0	66.8	75.1	57.9	0.01	22.1	98.6	4.1	610.9	0.23	0.20
6	8	86.9	51.9	70.6	60.9	53.8		14.5	100.3	4.2	695.7	0.29	0.24
6	9	91.9	53.4	70.7	54.2	51.2		25.6	108.9	4.5	469.9	0.29	0.22
6	10	95.8	52.3	76.7	36.9	43.6	0.01	27.2	128.5	5.4	734.0	0.40	0.31
6	11	94.8	51.9	76.6	36.2	43.3		25.4	142.6	5.9	692.5	0.40	0.30
6	12	85.1	54.0	70.2	62.9	55.3		15.7	82.4	3.4	465.5	0.21	0.18
6	13	64.1	43.8	53.1	68.2	41.1	0.31	25.4	146.3	6.1	271.1	0.16	0.12
6	14	68.4	39.7	55.5	51.5	35.1	0.04	32.8	260.1	10.8	693.0	0.30	0.22
6	15	85.1	45.7	68.1	31.0	33.4		29.8	200.5	8.4	745.0	0.43	0.31
6	16	83.6	47.6	65.9	56.0	48.7		12.8	94.3	3.9	733.0	0.28	0.24
6	17	95.4	50.9	75.1	38.8	40.9		23.1	105.6	4.4	778.0	0.38	0.30
6	18	94.2	57.8	76.1	27.5	37.5		33.3	183.6	7.7	678.6	0.48	0.34
6	19	72.0	56.1	62.3	58.8	47.5		20.8	148.3	6.2	521.7	0.24	0.19
6	20	78.2	49.2	62.8	73.3	53.4		24.7	129.3	5.4	642.9	0.24	0.20
6	21	81.4	54.7	67.1	69.8	55.3		18.0	85.6	3.6	670.8	0.25	0.22
6	22	89.9	50.3	70.4	52.0	49.1		40.5	139.3	5.8	613.0	0.34	0.26
6	23	96.0	50.9	74.8	40.5	44.7		24.9	116.9	4.9	685.4	0.38	0.29

TABLE B9
NCWCD WEATHER STATION DATA
LONGMONT SOUTH
2001

Date		Temperature			Relative Humidity	Dew Point	Precipitation Total	Wind			Solar Radiation	ASCE Calculation	
Month	Day	Max. (°F)	Min. (°F)	Average (°F)	Average (%)	Average (°F)	(inch)	Max (mph)	Total (miles)	Average (mph)	Total (Langl)	ET_r Alfalfa (inch)	ET_o Grass (inch)
6	24	93.0	55.0	75.5	40.4	48.4		28.5	138.7	5.8	437.4	0.33	0.24
6	25	94.0	58.2	76.1	45.8	51.2		32.4	111.0	4.6	579.8	0.33	0.25
6	26	90.1	56.2	73.2	53.9	54.5		29.8	130.2	5.4	536.6	0.30	0.23
6	27	89.5	56.6	74.9	51.3	53.4		13.7	97.0	4.0	710.0	0.31	0.26
6	28	92.7	55.7	76.8	43.2	50.0		15.7	89.3	3.7	730.0	0.33	0.27
6	29	96.0	57.6	78.6	43.6	51.7		20.3	111.6	4.7	677.4	0.36	0.28
6	30	98.1	58.4	79.4	44.1	52.8		27.8	126.3	5.3	588.8	0.37	0.28
7	1	96.3	61.2	78.2	46.2	54.6		20.2	106.7	4.4	644.8	0.35	0.27
7	2	97.9	57.3	77.4	45.4	51.6		26.4	118.9	5.0	605.0	0.37	0.28
7	3	87.8	55.7	74.1	59.3	58.1		23.7	122.6	5.1	633.0	0.28	0.23
7	4	90.4	58.4	75.6	61.2	59.6		27.9	104.3	4.3	560.4	0.27	0.22
7	5	95.1	63.0	78.0	55.2	59.5	0.02	32.9	165.7	6.9	586.7	0.37	0.28
7	6	95.9	63.9	79.7	49.3	57.3		18.1	109.7	4.6	653.4	0.34	0.27
7	7	93.2	60.5	77.1	60.4	60.4	0.17	24.2	105.4	4.4	618.4	0.30	0.25
7	8	91.7	62.7	73.7	71.3	62.1	0.15	46.0	171.0	7.1	516.6	0.32	0.24
7	9	85.3	58.2	72.3	70.9	61.7	0.01	16.6	92.1	3.8	605.3	0.24	0.21
7	10	85.7	64.0	72.0	69.7	61.0	0.09	25.6	145.2	6.0	631.4	0.30	0.24
7	11	87.0	59.5	71.0	76.1	61.7	0.05	22.0	113.3	4.7	628.1	0.27	0.22
7	12	83.3	60.2	68.9	85.8	63.8	0.28	31.0	125.4	5.2	468.9	0.20	0.17
7	13	81.9	58.7	68.3	84.8	62.9	0.05	27.0	103.1	4.3	451.5	0.19	0.16
7	14	82.5	56.2	67.1	86.2	62.3	0.13	24.8	91.7	3.8	573.2	0.21	0.18
7	15	86.1	56.2	71.6	62.6	55.9	0.03	31.6	112.7	4.7	676.9	0.29	0.24
7	16	88.1	59.5	75.2	42.4	49.2		26.5	151.0	6.3	720.0	0.37	0.28
7	17	88.1	52.8	73.1	42.9	47.7		16.1	109.4	4.6	531.7	0.28	0.22
7	18	88.1	56.0	75.0	42.7	49.7		33.8	118.1	4.9	583.9	0.30	0.24
7	19	90.3	59.5	75.4	49.2	53.6		22.9	125.3	5.2	574.3	0.31	0.24
7	20	91.3	56.5	75.8	50.9	54.6		22.6	90.9	3.8	659.7	0.29	0.24
7	21	90.4	59.5	76.8	48.7	54.7		14.5	97.5	4.1	469.5	0.26	0.20
7	22	94.5	60.7	78.8	45.8	54.1		21.8	88.6	3.7	681.9	0.32	0.26

TABLE B9
NCWCD WEATHER STATION DATA
LONGMONT SOUTH
2001

Date		Temperature			Relative Humidity	Dew Point	Precipitation Total	Wind			Solar Radiation	ASCE Calculation	
Month	Day	Max. (°F)	Min. (°F)	Average (°F)	Average (%)	Average (°F)	(inch)	Max (mph)	Total (miles)	Average (mph)	Total (Langl)	ET_r Alfalfa (inch)	ET_o Grass (inch)
7	23	79.5	60.1	69.6	75.6	61.9		16.9	112.1	4.7	408.2	0.17	0.15
7	24	84.7	57.4	69.2	79.2	61.5	0.01	20.0	98.1	4.1	526.3	0.22	0.18
7	25	87.9	55.3	71.5	65.3	57.5	0.03	27.8	110.3	4.6	630.4	0.28	0.23
7	26	79.2	56.3	67.5	77.3	59.6		22.5	108.9	4.5	416.2	0.18	0.15
7	27	85.6	55.5	71.4	62.5	55.9		12.8	74.6	3.1	603.4	0.24	0.20
7	28	95.6	53.9	75.9	47.0	49.2		16.7	91.5	3.8	695.7	0.33	0.26
7	29	100.2	54.6	81.0	35.0	45.8		15.3	94.3	3.9	658.2	0.35	0.27
7	30	99.1	57.5	80.9	33.4	46.6		23.8	114.5	4.8	634.1	0.37	0.28
7	31	92.3	64.3	77.8	47.6	54.8	0.01	26.9	116.0	4.8	486.5	0.30	0.23
8	1	86.8	60.4	71.9	67.1	58.2	0.01	21.3	124.3	5.2	478.4	0.26	0.20
8	2	88.3	60.9	72.5	70.9	61.0		22.3	125.0	5.2	538.6	0.27	0.21
8	3	92.5	57.6	76.3	57.0	57.2		19.5	84.4	3.5	672.9	0.29	0.24
8	4	93.4	61.3	78.5	52.5	58.4		12.6	81.9	3.4	512.2	0.25	0.21
8	5	94.5	62.7	79.8	48.3	56.5	0.01	24.0	96.5	4.0	532.0	0.29	0.23
8	6	92.7	63.1	73.9	67.4	60.9	0.20	29.0	113.7	4.7	445.7	0.27	0.21
8	7	91.7	59.1	75.2	68.1	61.8	0.02	23.0	101.9	4.2	626.6	0.28	0.23
8	8	89.6	59.1	74.6	58.1	57.5	0.01	22.7	132.8	5.5	596.8	0.30	0.24
8	9	68.4	57.5	63.6	85.1	58.8	0.30	20.7	127.3	5.3	253.5	0.10	0.09
8	10	77.8	56.5	64.3	85.2	59.4	0.01	18.0	107.1	4.5	499.8	0.18	0.16
8	11	84.0	52.8	67.8	74.3	57.8		20.8	87.7	3.7	536.0	0.21	0.18
8	12	84.5	53.6	69.1	71.2	58.4		12.1	78.7	3.3	524.5	0.21	0.18
8	13	81.4	56.8	68.3	79.5	61.2		20.0	90.8	3.8	439.9	0.18	0.15
8	14	77.9	61.0	67.8	80.2	61.2		32.8	112.2	4.7	372.9	0.16	0.14
8	15	78.5	58.5	67.2	70.5	56.5	0.01	35.2	117.6	4.9	411.3	0.19	0.16
8	16	76.3	52.1	64.2	73.6	54.8		32.2	105.3	4.4	430.4	0.17	0.14
8	17	83.6	48.4	66.6	65.4	52.2		11.6	72.6	3.0	612.1	0.22	0.19
8	18	89.5	48.3	71.0	52.1	49.3		15.1	74.4	3.1	608.3	0.25	0.21
8	19	94.3	53.8	72.4	49.8	50.8	0.01	29.3	100.9	4.2	432.8	0.28	0.21
8	20	82.2	63.0	72.3	49.4	52.2		30.1	147.5	6.1	348.9	0.25	0.18

TABLE B9
NCWCD WEATHER STATION DATA
LONGMONT SOUTH
2001

Date		Temperature			Relative Humidity	Dew Point	Precipitation Total	Wind			Solar Radiation	ASCE Calculation	
Month	Day	Max. (°F)	Min. (°F)	Average (°F)	Average (%)	Average (°F)	(inch)	Max (mph)	Total (miles)	Average (mph)	Total (Langl)	ET_r Alfalfa (inch)	ET_o Grass (inch)
8	21	84.5	55.6	70.1	59.5	54.4		17.5	93.0	3.9	500.3	0.22	0.18
8	22	82.4	53.3	68.1	58.3	52.2		25.2	113.6	4.7	408.4	0.22	0.17
8	23	83.1	56.9	68.2	68.4	56.5		13.1	71.1	3.0	510.4	0.20	0.17
8	24	90.0	50.1	71.7	56.4	52.0		13.3	78.0	3.3	602.7	0.25	0.21
8	25	81.8	57.8	69.8	55.0	52.1		24.8	140.5	5.9	507.0	0.26	0.20
8	26	90.2	49.3	70.6	51.9	48.4		18.0	83.6	3.5	595.8	0.26	0.21
8	27	93.2	52.9	72.1	49.0	51.1		27.3	101.5	4.2	550.7	0.29	0.22
8	28	85.2	51.3	69.7	49.3	49.1		24.6	101.7	4.2	494.7	0.24	0.19
8	29	86.5	50.1	68.4	54.5	49.7		30.6	98.5	4.1	432.2	0.23	0.18
8	30	77.4	51.3	64.4	68.2	53.5		20.1	93.2	3.9	419.5	0.17	0.14
8	31	79.0	50.8	64.3	72.7	54.8		22.1	84.0	3.5	344.8	0.15	0.12
9	1	84.6	47.9	67.0	61.6	51.6		26.1	99.8	4.2	434.3	0.21	0.16
9	2	88.2	53.9	71.8	44.7	48.3		21.1	104.9	4.4	514.3	0.26	0.20
9	3	89.0	52.6	71.8	47.0	49.4		13.7	68.6	2.9	556.1	0.23	0.19
9	4	88.1	51.4	71.3	45.0	47.2		14.9	85.4	3.6	547.9	0.25	0.19
9	5	85.8	54.2	67.9	52.1	49.2		29.7	103.4	4.3	471.4	0.25	0.19
9	6	84.9	50.9	66.9	56.7	49.1		37.3	134.5	5.6	362.2	0.25	0.18
9	7	68.1	44.8	56.1	65.5	43.0		28.0	125.9	5.2	483.1	0.18	0.14
9	8	49.6	36.7	43.1	95.6	41.9		22.1	135.8	5.7	216.4	0.05	0.05
9	9	72.4	33.6	52.2	71.6	41.8	0.01	11.6	68.8	2.9	566.3	0.17	0.14
9	10	81.1	39.2	60.2	63.7	45.4		11.3	74.5	3.1	558.2	0.20	0.16
9	11	85.7	45.6	67.3	45.6	43.4		21.9	70.5	2.9	450.2	0.20	0.16
9	12	84.7	47.3	67.2	44.6	44.1		16.7	93.8	3.9	531.3	0.24	0.18
9	13	78.0	50.0	63.5	71.0	53.2	0.06	19.3	97.7	4.1	334.3	0.16	0.12
9	14	76.8	50.2	62.0	84.6	56.6	0.07	20.4	85.2	3.5	450.0	0.15	0.13
9	15	67.1	54.6	59.3	92.5	57.0	0.05	14.8	81.4	3.4	301.0	0.09	0.08
9	16	76.0	55.1	61.4	81.8	55.3		15.7	76.1	3.2	268.6	0.13	0.10
9	17	67.0	50.9	57.5	85.9	53.2	0.02	17.9	81.0	3.4	287.6	0.10	0.08
9	18	69.3	44.5	56.5	85.6	51.5		11.7	62.1	2.6	281.1	0.09	0.08

TABLE B9
NCWCD WEATHER STATION DATA
LONGMONT SOUTH
2001

Date		Temperature			Relative Humidity	Dew Point	Precipitation Total	Wind			Solar Radiation	ASCE Calculation	
Month	Day	Max. (°F)	Min. (°F)	Average (°F)	Average (%)	Average (°F)	(inch)	Max (mph)	Total (miles)	Average (mph)	Total (Langl)	ET_r Alfalfa (inch)	ET_o Grass (inch)
9	19	82.9	43.0	63.8	55.5	44.4	0.01	24.9	131.6	5.5	511.1	0.25	0.18
9	20	80.1	47.7	64.4	53.1	45.2		12.6	89.2	3.7	504.3	0.20	0.16
9	21	88.3	44.5	65.6	55.1	44.8		29.1	92.7	3.9	475.6	0.24	0.18
9	22	83.3	50.1	66.0	43.6	40.7		19.6	107.0	4.5	484.5	0.25	0.18
9	23	72.9	43.3	57.5	60.7	42.9		11.4	73.2	3.0	492.5	0.16	0.13
9	24	81.7	40.5	59.9	64.7	45.3		10.4	63.7	2.7	488.6	0.18	0.14
9	25	85.0	43.5	63.7	53.1	43.0		11.3	66.2	2.8	482.1	0.19	0.15
9	26	89.7	45.9	68.4	44.1	41.3	0.01	32.9	92.2	3.8	421.2	0.24	0.17
9	27	88.5	49.7	70.5	35.8	39.3		14.6	74.9	3.1	475.2	0.22	0.16
9	28	80.3	47.9	64.3	56.1	47.8		10.6	78.3	3.3	341.6	0.16	0.12
9	29	80.5	51.1	64.0	59.8	48.8		19.5	98.3	4.1	260.2	0.17	0.12
9	30	74.7	46.6	60.4	68.1	49.2		11.0	71.1	3.0	405.1	0.14	0.11
10	1	81.2	46.3	63.3	58.4	46.2		11.1	69.6	2.9	440.3	0.17	0.13
10	2	82.6	55.4	68.7	34.1	37.7		18.2	114.8	4.8	374.7	0.24	0.17
10	3	80.3	41.7	60.4	49.3	39.2		18.7	108.6	4.5	434.7	0.22	0.15
10	4	54.8	34.4	46.5	79.4	40.3	0.07	28.6	153.7	6.4	193.2	0.07	0.05
10	5	42.9	31.0	36.4	94.0	34.6	0.01	22.3	94.2	3.9	114.1	0.03	0.03
10	6	69.6	27.0	47.4	70.6	36.2	0.01	10.2	65.8	2.7	410.0	0.13	0.10
10	7	74.8	39.2	56.3	62.9	42.4	0.01	22.9	111.3	4.6	212.1	0.15	0.11
10	8	77.6	46.9	62.8	47.0	40.5		18.9	96.4	4.0	405.3	0.18	0.13
10	9	63.6	41.7	51.6	69.9	41.6	0.04	34.8	140.6	5.9	290.2	0.13	0.09
10	10	57.6	32.3	44.1	65.4	32.0		20.9	106.3	4.4	387.2	0.12	0.09
10	11	66.3	25.7	45.7	57.3	28.8		42.7	206.3	8.6	188.0	0.20	0.13
10	12	52.7	36.9	46.1	40.8	23.5		29.5	194.3	8.1	377.3	0.16	0.11
10	13	61.3	34.8	52.2	45.8	31.8		25.3	225.7	9.4	306.0	0.17	0.12
10	14	67.1	28.6	47.2	66.5	35.2		19.3	113.3	4.7	403.1	0.14	0.10
10	15	50.9	31.0	39.5	77.1	32.7	0.01	45.0	130.8	5.5	329.4	0.09	0.07
10	16	72.9	25.8	45.7	63.9	31.7		10.3	62.9	2.6	369.1	0.14	0.10
10	17	77.3	33.5	56.1	47.1	32.0		23.2	111.9	4.7	234.3	0.19	0.13

TABLE B9
NCWCD WEATHER STATION DATA
LONGMONT SOUTH
2001

Date		Temperature			Relative Humidity	Dew Point	Precipitation Total	Wind			Solar Radiation	ASCE Calculation	
Month	Day	Max. (°F)	Min. (°F)	Average (°F)	Average (%)	Average (°F)	(inch)	Max (mph)	Total (miles)	Average (mph)	Total (Langl)	ET_r Alfalfa (inch)	ET_o Grass (inch)
10	18	66.9	34.0	49.2	56.2	32.8		20.9	122.5	5.1	382.3	0.16	0.11
10	19	70.9	30.5	52.8	48.0	30.0		20.7	123.9	5.2	330.9	0.18	0.12
10	20	59.5	36.0	46.8	58.8	32.7		15.1	83.3	3.5	137.3	0.09	0.07
10	21	57.1	31.0	45.3	73.7	36.9		12.1	67.9	2.8	203.9	0.06	0.05
10	22	68.0	37.3	53.1	57.7	37.1	0.02	40.5	204.2	8.5	256.9	0.18	0.12
10	23	69.9	39.8	55.2	43.2	32.0		36.8	277.4	11.6	347.6	0.27	0.17
10	24	54.5	32.4	44.0	28.4	12.2	0.01	37.2	325.4	13.6	376.9	0.24	0.15
10	25	59.7	27.1	42.0	37.2	16.3		17.3	101.9	4.2	355.9	0.14	0.09
10	26	59.8	25.5	41.3	44.9	20.3		14.6	74.3	3.1	351.8	0.11	0.08
10	27	70.2	28.7	51.0	45.2	28.9		10.1	64.4	2.7	236.9	0.11	0.08
10	28	75.6	45.5	58.2	46.7	37.1		13.7	109.4	4.6	132.2	0.17	0.11
10	29	56.7	35.3	47.0	64.5	35.3		17.6	69.7	2.9	254.7	0.07	0.06
10	30	62.7	35.7	46.4	76.6	39.0		12.4	62.8	2.6	83.1	0.07	0.05
10	31	71.6	42.2	60.1	35.0	32.1		44.7	283.0	11.8	244.3	0.27	0.17
11	1	63.1	38.6	49.8	45.9	28.8		27.7	146.0	6.1	275.8		
11	2	62.5	29.6	46.5	52.0	29.0		10.4	76.9	3.2	318.2		
11	3	63.9	35.5	49.4	52.8	31.4		12.9	82.9	3.5	300.6		
11	4	70.8	28.5	48.3	50.6	29.0		8.9	63.7	2.7	322.7		
11	5	74.9	31.5	52.9	42.6	29.1		10.8	63.5	2.6	283.5		
11	6	71.0	39.5	54.7	47.2	33.8		13.1	80.7	3.4	293.8		
11	7	71.6	32.2	47.1	67.7	35.2	0.03	28.6	146.5	6.1	220.0		
11	8	47.8	28.3	37.0	88.4	33.2	0.12	10.4	47.8	2.0	310.6		
11	9	64.8	20.8	39.5	59.3	24.1	0.03	6.9	61.8	2.6	322.1		
11	10	62.2	27.0	42.6	44.1	20.4		8.8	61.3	2.6	315.9		
11	11	65.9	26.8	45.5	53.5	28.0		12.6	76.9	3.2	305.3		
11	12	68.3	32.0	49.3	56.5	32.5	0.01	12.5	70.3	2.9	282.1		
11	13	63.7	34.1	47.5	61.4	33.6		10.3	66.3	2.8	222.9		
11	14	65.4	34.4	50.1	51.2	31.2		15.3	93.1	3.9	282.7		
11	15	66.3	28.5	45.6	61.1	31.7		10.9	68.2	2.8	279.4		

TABLE B9
NCWCD WEATHER STATION DATA
LONGMONT SOUTH
2001

Date		Temperature			Relative Humidity	Dew Point	Precipitation Total	Wind			Solar Radiation	ASCE Calculation	
Month	Day	Max. (°F)	Min. (°F)	Average (°F)	Average (%)	Average (°F)	(inch)	Max (mph)	Total (miles)	Average (mph)	Total (Langl)	ET_r Alfalfa (inch)	ET_o Grass (inch)
11	16	63.9	29.0	44.6	67.4	33.4		9.6	59.0	2.5	277.6		
11	17	64.3	27.7	44.3	69.8	34.0		6.9	62.7	2.6	271.4		
11	18	50.3	27.4	35.3	87.3	31.4	0.07	23.3	124.8	5.2	119.5		
11	19	48.4	17.2	32.0	94.4	30.7	0.04	7.2	52.8	2.2	273.1		
11	20	60.3	20.0	36.7	70.4	26.4		9.6	66.3	2.8	284.0		
11	21	59.2	21.6	41.2	47.3	21.9	0.01	12.4	82.2	3.4	219.1		
11	22	58.4	28.3	41.8	63.9	29.8		16.5	83.5	3.5	199.8		
11	23	45.3	33.4	39.6	82.1	34.5	0.05	30.5	174.9	7.3	75.4		
11	24	49.8	23.3	36.3	59.3	21.6		27.1	113.1	4.7	260.0		
11	25	35.5	19.4	28.3	93.2	26.4	0.14	20.5	160.1	6.7	128.2		
11	26	30.0	14.4	22.9	93.8	21.5	0.05	19.8	150.2	6.3	215.2		
11	27	30.9	2.3	14.7	85.1	10.8	0.02	11.3	65.6	2.7	255.3		
11	28	31.2	0.3	13.1	83.4	9.0		7.8	45.2	1.9	257.3		
11	29	35.8	6.7	21.4	86.4	18.2	0.01	8.6	61.1	2.5	212.4		
11	30	45.5	20.3	33.3	60.6	20.2	0.04	27.6	156.4	6.5	258.6		
12	1	50.8	23.8	37.5	48.4	18.8		21.3	114.7	4.8	239.1		
12	2	57.7	30.2	42.2	60.6	28.5		15.9	95.0	4.0	235.5		
12	3	67.0	28.0	44.8	53.5	25.4		24.3	112.9	4.7	234.1		
12	4	45.1	24.8	34.2	70.5	25.3		12.9	74.3	3.1	186.3		
12	5	48.1	26.9	38.8	40.1	15.1	0.01	32.2	264.9	11.0	249.5		
12	6	57.3	36.3	46.4	34.4	19.2	0.01	53.7	295.5	12.3	232.8		
12	7	44.5	18.6	34.5	53.2	19.3		22.0	142.3	5.9	155.3		
12	8	50.8	12.5	28.6	54.7	12.2		12.9	64.4	2.7	239.6		
12	9	58.0	18.3	34.9	54.4	18.8		10.8	65.1	2.7	186.3		
12	10	41.5	18.7	29.6	66.7	19.4		9.7	64.6	2.7	208.4		
12	11	47.2	13.9	32.3	54.8	14.5		26.2	153.5	6.4	236.6		
12	12	28.3	13.7	24.0	85.4	20.2		9.1	57.6	2.4	66.6		
12	13	41.9	9.3	25.9	73.1	17.7	0.04	37.0	131.8	5.5	183.6		
12	14	51.3	22.5	34.4	59.7	21.2		27.7	111.6	4.7	150.1		

TABLE B9
NCWCD WEATHER STATION DATA
LONGMONT SOUTH
2001

Date		Temperature			Relative Humidity	Dew Point	Precipitation Total	Wind			Solar Radiation	ASCE Calculation	
Month	Day	Max. (°F)	Min. (°F)	Average (°F)	Average (%)	Average (°F)	(inch)	Max (mph)	Total (miles)	Average (mph)	Total (Langl)	ET_r Alfalfa (inch)	ET_o Grass (inch)
12	15	44.9	17.9	30.6	74.3	22.1	0.05	16.9	92.5	3.9	149.7		
12	16	31.4	9.9	22.0	99.0	22.1	0.05	9.1	69.3	2.9	239.2		
12	17	63.6	15.3	39.2	57.5	21.7	0.02	16.1	83.3	3.5	230.4		
12	18	42.5	18.3	32.0	72.0	23.6		19.5	110.9	4.6	211.5		
12	19	54.5	14.6	32.7	67.4	20.8	0.02	27.3	98.4	4.1	213.6		
12	20	41.8	20.8	30.9	70.3	22.2		13.5	74.2	3.1	193.4		
12	21	48.8	16.1	32.3	68.2	21.9	0.02	27.8	129.6	5.4	197.7		
12	22	42.2	18.3	30.0	65.7	18.6		25.4	129.8	5.4	209.1		
12	23	45.3	11.4	26.5	69.6	16.2		12.1	63.7	2.7	233.6		
12	24	40.5	13.0	25.8	64.4	14.2		8.6	67.4	2.8	229.7		
12	25	44.0	13.4	28.0	54.3	12.0		12.4	93.2	3.9	194.7		
12	26	51.2	18.0	32.9	51.5	15.4		13.9	75.7	3.2	230.8		
12	27	46.6	18.4	31.8	52.4	15.0		22.2	95.6	4.0	212.3		
12	28	52.9	23.4	38.1	50.4	19.2		41.7	282.4	11.8	203.1		
12	29	31.4	18.0	23.9	75.5	17.3		12.9	80.6	3.4	133.8		
12	30	25.1	19.3	22.3	81.1	17.4		8.8	69.2	2.9	79.5		
12	31	35.9	10.2	23.5	78.8	17.6		14.5	73.0	3.0	226.3		
							10.38						**38.87**

TABLE B10
NCWCD WEATHER STATION DATA
LONGMONT SOUTH
2000

Date		Temperature			Relative Humidity	Dew Point	Precipitation Total	Wind			Solar Radiation	ASCE Calculation	
Month	Day	Max. (°F)	Min. (°F)	Average (°F)	Average (%)	Average (°F)	(inch)	Max (mph)	Total (miles)	Average (mph)	Total (Langl)	ET_r Alfalfa (inch)	ET_o Grass (inch)
1	1	52.7	21.5	37.8	49.4	19.2		14.0	95.5	4.0	183.6		
1	2	43.8	18.8	32.0	74.9	24.3	0.02	26.5	127.8	5.3	203.5		
1	3	31.2	10.1	24.3	59.3	12.2		25.4	141.6	5.9	160.2		
1	4	51.0	7.8	27.3	59.4	14.6		20.1	82.1	3.4	229.5		
1	5	45.2	25.0	34.1	42.4	12.0	0.02	40.7	201.9	8.4	244.4		
1	6	41.4	10.1	26.6	45.8	6.3		12.9	92.1	3.8	254.0		
1	7	46.6	12.8	29.4	51.4	12.6		19.4	72.2	3.0	78.5		
1	8	51.3	17.1	35.1	42.5	11.7		39.3	171.9	7.2	229.6		
1	9	44.3	30.1	37.2	30.7	8.8		44.5	296.2	12.3	226.3		
1	10	46.5	18.4	34.8	57.1	20.6		33.5	208.6	8.7	187.0		
1	11	64.3	14.8	41.8	47.2	15.0	0.02	47.3	248.9	10.4	190.7		
1	12	58.9	27.8	46.8	42.5	24.0		39.5	339.7	14.2	202.6		
1	13	44.8	21.7	30.8	65.2	19.9		16.4	82.5	3.4	228.8		
1	14	64.8	19.8	38.0	52.5	18.6		12.1	91.0	3.8	238.0		
1	15	61.5	27.3	41.1	39.4	16.7		14.5	97.2	4.0	204.4		
1	16	41.3	22.4	31.9	64.5	21.0		13.5	87.9	3.7	194.6		
1	17	61.6	25.1	41.8	59.4	27.5		15.1	92.0	3.8	239.4		
1	18	51.5	25.6	38.3	73.1	30.1		16.7	110.0	4.6	119.4		
1	19	57.2	21.5	38.7	66.5	26.6		41.6	210.1	8.8	247.0		
1	20	50.6	14.8	30.2	70.2	20.7		10.3	67.0	2.8	221.3		
1	21	50.2	23.4	35.3	68.7	25.5		16.7	88.0	3.7	126.8		
1	22	48.2	24.8	37.0	52.4	19.3		37.0	228.1	9.5	277.6		
1	23	44.6	22.1	33.9	39.7	11.0		18.3	130.3	5.4	290.5		
1	24	54.2	16.9	36.8	48.8	18.4		32.9	194.6	8.1	185.5		
1	25	32.3	21.9	27.1	72.0	19.2		11.2	48.2	2.0	100.1		
1	26	43.4	20.3	30.5	84.8	26.8	0.04	10.3	72.3	3.0	137.2		
1	27	35.9	23.8	28.9	95.3	27.5	0.15	9.9	58.9	2.5	162.1		
1	28	35.5	13.2	23.4	84.7	19.3	0.01	13.8	76.3	3.2	279.4		
1	29	32.9	11.8	22.1	79.0	15.9		11.3	64.8	2.7	290.3		

TABLE B10
NCWCD WEATHER STATION DATA
LONGMONT SOUTH
2000

Date		Temperature			Relative Humidity	Dew Point	Precipitation Total	Wind			Solar Radiation	ASCE Calculation	
Month	Day	Max. (°F)	Min. (°F)	Average (°F)	Average (%)	Average (°F)	(inch)	Max (mph)	Total (miles)	Average (mph)	Total (Langl)	ET_r Alfalfa (inch)	ET_o Grass (inch)
1	30	38.1	8.7	22.9	74.9	15.7		8.8	52.5	2.2	312.4		
1	31	45.9	11.8	26.8	62.9	14.4	0.01	7.2	55.2	2.3	316.7		
2	1	49.9	17.9	32.0	51.3	14.6		10.7	65.8	2.7	311.2		
2	2	66.4	27.0	49.8	31.9	16.5	0.02	27.8	188.8	7.9	209.1		
2	3	58.3	26.5	37.1	56.8	21.8	0.01	30.3	171.6	7.2	262.2		
2	4	41.0	16.1	29.8	58.0	16.3		14.1	82.1	3.4	303.4		
2	5	51.8	18.0	35.9	52.3	18.7		11.0	77.3	3.2	203.5		
2	6	55.9	23.0	40.4	45.7	18.8		15.9	102.5	4.3	163.6		
2	7	56.5	21.8	38.3	52.9	20.6		12.4	81.4	3.4	332.6		
2	8	61.5	24.8	40.8	44.7	18.6		12.2	89.9	3.7	213.9		
2	9	55.6	30.5	44.7	40.2	21.7		31.3	195.4	8.1	82.9		
2	10	46.8	26.9	37.7	67.7	27.9		17.2	122.5	5.1	209.8		
2	11	29.4	17.0	24.8	96.1	23.9		12.7	114.9	4.8	133.1		
2	12	39.1	15.4	26.9	90.7	24.6		13.2	89.4	3.7	144.4		
2	13	51.0	23.6	34.9	62.8	19.9	0.02	34.4	162.4	6.8	333.7		
2	14	66.1	33.5	49.9	40.4	26.3		33.6	193.5	8.1	300.0		
2	15	56.4	34.9	47.5	38.1	21.7		45.1	412.8	17.2	383.1		
2	16	51.9	21.0	37.4	52.5	20.7		12.9	96.6	4.0	332.9		
2	17	35.8	22.0	29.4	92.0	27.3	0.11	19.6	165.7	6.9	71.9		
2	18	37.6	17.2	24.9	85.3	20.9		9.8	70.4	2.9	363.2		
2	19	50.3	12.8	29.8	76.5	22.3		9.8	64.0	2.7	390.4		
2	20	49.2	17.8	31.7	77.7	25.3		11.0	69.3	2.9	181.6		
2	21	68.3	25.7	47.4	50.2	26.1		19.2	123.5	5.1	362.5		
2	22	62.0	30.1	44.5	62.2	31.4	0.03	31.2	181.8	7.6	245.7		
2	23	62.2	33.3	48.0	52.2	29.8		16.4	110.0	4.6	396.9		
2	24	60.4	26.9	44.5	55.0	27.6		25.1	122.0	5.1	356.0		
2	25	46.1	33.5	39.2	30.6	10.3	0.01	40.7	361.7	15.1	307.4		
2	26	54.0	29.3	41.6	24.8	7.3		38.2	347.1	14.5	390.7		
2	27	64.4	22.4	42.4	41.2	18.6		14.9	81.8	3.4	419.6		

TABLE B10
NCWCD WEATHER STATION DATA
LONGMONT SOUTH
2000

Date		Temperature			Relative Humidity	Dew Point	Precipitation Total	Wind			Solar Radiation	ASCE Calculation	
Month	Day	Max. (°F)	Min. (°F)	Average (°F)	Average (%)	Average (°F)	(inch)	Max (mph)	Total (miles)	Average (mph)	Total (Langl)	ET_r Alfalfa (inch)	ET_o Grass (inch)
2	28	66.6	23.5	46.7	45.4	22.9		33.2	187.0	7.8	330.5		
2	29	59.5	32.3	45.5	42.0	22.0		25.4	112.5	4.7	408.0		
3	1	57.3	25.4	42.6	46.1	21.7		14.7	89.9	3.7	355.5	0.12	0.09
3	2	43.1	33.7	37.8	79.6	31.6	0.01	18.3	110.1	4.6	139.2	0.06	0.04
3	3	58.5	24.6	42.4	68.2	30.5		19.4	79.1	3.3	445.0	0.11	0.09
3	4	67.5	24.3	45.6	48.9	24.0		11.0	68.5	2.9	457.7	0.14	0.11
3	5	69.0	28.9	48.5	43.1	25.3	0.05	45.1	185.4	7.7	334.7	0.24	0.15
3	6	63.0	33.2	51.3	31.5	20.9		21.7	158.2	6.6	394.5	0.20	0.13
3	7	59.0	30.6	46.0	52.3	29.3		33.6	167.9	7.0	294.6	0.15	0.10
3	8	57.5	28.7	46.2	33.9	16.4	0.01	42.5	344.0	14.3	414.1	0.25	0.16
3	9	35.1	26.6	30.6	90.8	28.3		13.8	113.8	4.7	160.6	0.03	0.03
3	10	44.5	27.6	35.4	76.8	28.1	0.01	25.4	116.5	4.9	335.3	0.08	0.06
3	11	59.5	18.1	38.9	53.6	19.7	0.01	33.9	141.9	5.9	473.2	0.17	0.12
3	12	49.4	25.7	38.2	54.2	22.6		16.1	111.0	4.6	378.5	0.11	0.08
3	13	58.9	20.0	39.4	55.2	22.1		14.5	88.3	3.7	489.8	0.14	0.10
3	14	60.4	24.9	44.6	51.3	24.8		28.9	145.8	6.1	278.3	0.16	0.11
3	15	48.5	25.1	34.0	87.3	29.2	0.32	21.5	179.8	7.5	101.2	0.08	0.05
3	16	36.7	23.5	28.4	99.4	28.4	0.16	9.4	58.4	2.4	506.5	0.06	0.06
3	17	43.9	17.9	32.7	84.2	28.5		17.2	77.9	3.2	438.6	0.07	0.06
3	18	44.5	25.7	35.3	65.3	24.5		28.4	175.1	7.3	376.2	0.10	0.08
3	19	66.3	21.5	43.2	58.1	27.3		19.2	107.7	4.5	403.6	0.17	0.12
3	20	46.7	26.6	31.5	86.7	27.9	0.03	28.5	302.9	12.6	126.9	0.10	0.07
3	21	40.3	26.3	31.1	90.9	28.5	0.05	15.6	111.7	4.7	355.9	0.06	0.06
3	22	46.8	24.6	36.2	87.0	32.5		18.6	69.5	2.9	257.1	0.06	0.05
3	23	65.7	28.1	47.4	60.2	30.9	0.01	27.5	173.8	7.2	542.4	0.21	0.15
3	24	64.9	36.1	52.2	40.1	26.8	0.02	35.9	233.3	9.7	560.3	0.26	0.18
3	25	65.1	27.8	47.7	52.1	28.2		13.8	97.1	4.0	390.8	0.16	0.12
3	26	65.8	37.5	53.0	44.3	30.3		28.6	167.2	7.0	500.2	0.22	0.16
3	27	73.6	28.5	51.9	49.7	28.6		23.0	107.2	4.5	575.4	0.23	0.17

TABLE B10
NCWCD WEATHER STATION DATA
LONGMONT SOUTH
2000

Date		Temperature			Relative Humidity	Dew Point	Precipitation Total	Wind			Solar Radiation	ASCE Calculation	
Month	Day	Max. (°F)	Min. (°F)	Average (°F)	Average (%)	Average (°F)	(inch)	Max (mph)	Total (miles)	Average (mph)	Total (Langl)	ET_r Alfalfa (inch)	ET_o Grass (inch)
3	28	57.9	32.8	46.6	55.7	30.8		23.4	127.7	5.3	385.6	0.14	0.11
3	29	59.8	34.7	46.9	62.5	32.5	0.01	20.8	111.7	4.7	517.9	0.16	0.12
3	30	39.3	31.7	34.3	96.3	33.1	0.13	23.6	186.8	7.8	95.8	0.03	0.03
3	31	35.8	29.8	31.6	100.8	31.4	0.25	15.2	107.3	4.5	272.4	0.04	0.04
4	1	49.2	25.6	37.2	65.1	25.1	0.01	14.0	102.3	4.3	577.8	0.13	0.10
4	2	49.8	25.9	34.9	86.4	30.6	0.21	27.9	113.4	4.7	195.7	0.08	0.06
4	3	43.7	14.2	31.7	74.2	23.6		14.5	75.4	3.1	588.0	0.09	0.09
4	4	75.4	26.0	54.4	46.5	26.7	0.04	30.5	193.8	8.1	605.4	0.31	0.22
4	5	74.9	51.8	66.6	22.4	26.5	0.01	38.7	306.0	12.8	508.1	0.41	0.27
4	6	73.7	32.2	55.8	39.4	26.7	0.01	45.5	295.2	12.3	544.4	0.36	0.24
4	7	60.3	32.9	44.1	45.2	22.7		31.3	232.6	9.7	583.0	0.25	0.18
4	8	69.5	23.0	45.6	44.6	22.5		15.1	69.9	2.9	609.1	0.19	0.15
4	9	76.3	33.4	55.7	39.8	28.3		20.5	131.3	5.5	565.4	0.27	0.20
4	10	63.1	37.0	52.4	45.8	30.5		28.9	182.6	7.6	429.4	0.21	0.15
4	11	65.4	35.1	49.9	56.7	34.3		15.7	119.4	5.0	606.1	0.20	0.16
4	12	73.7	32.1	54.3	48.9	30.9		30.5	114.1	4.8	501.6	0.23	0.17
4	13	76.5	50.7	63.7	26.8	27.9		21.1	118.3	4.9	462.6	0.27	0.19
4	14	75.5	37.5	56.4	42.0	31.3		32.7	181.1	7.5	439.4	0.29	0.20
4	15	37.6	27.7	31.2	94.3	29.7	0.13	11.9	127.7	5.3	116.6	0.04	0.03
4	16	65.2	27.7	44.1	74.6	35.4	0.01	14.7	88.8	3.7	587.4	0.17	0.14
4	17	76.1	33.5	55.6	54.8	35.6		18.1	106.7	4.4	631.9	0.24	0.19
4	18	79.6	37.9	57.4	38.1	29.2	0.04	54.9	296.2	12.3	546.6	0.43	0.29
4	19	53.2	38.1	47.7	44.7	27.0		43.2	236.4	9.8	151.1	0.16	0.11
4	20	68.5	28.9	50.8	53.3	32.5		14.8	116.9	4.9	651.4	0.22	0.17
4	21	75.9	33.8	56.0	46.5	33.1		19.4	99.2	4.1	537.1	0.23	0.18
4	22	69.8	40.2	54.4	58.2	39.1	0.07	32.0	203.0	8.5	286.2	0.21	0.15
4	23	65.5	43.9	53.8	77.3	46.2	0.01	22.3	138.0	5.8	379.5	0.14	0.12
4	24	64.9	38.3	50.5	63.1	36.6	0.03	46.4	211.3	8.8	550.3	0.22	0.17
4	25	68.5	35.6	52.0	44.0	29.2		17.4	119.0	5.0	644.3	0.24	0.18

TABLE B10
NCWCD WEATHER STATION DATA
LONGMONT SOUTH
2000

Date		Temperature			Relative Humidity	Dew Point	Precipitation Total	Wind			Solar Radiation	ASCE Calculation	
Month	Day	Max. (°F)	Min. (°F)	Average (°F)	Average (%)	Average (°F)	(inch)	Max (mph)	Total (miles)	Average (mph)	Total (Langl)	ET_r Alfalfa (inch)	ET_o Grass (inch)
4	26	77.2	34.2	56.6	48.8	34.2		20.8	113.5	4.7	485.2	0.24	0.18
4	27	65.8	39.7	54.3	54.4	37.0		13.7	82.3	3.4	667.3	0.20	0.17
4	28	70.3	35.3	52.3	59.4	38.3		13.7	103.5	4.3	540.5	0.20	0.16
4	29	70.3	41.1	54.2	71.8	44.7	0.02	30.5	184.8	7.7	421.3	0.20	0.15
4	30	52.5	35.0	45.2	74.2	36.9	0.09	23.1	170.3	7.1	237.3	0.09	0.07
5	1	69.1	33.2	51.5	58.0	34.2		14.0	71.2	3.0	680.3	0.20	0.17
5	2	76.1	37.1	58.6	53.6	39.4		15.5	95.8	4.0	698.1	0.24	0.20
5	3	79.2	41.9	62.8	51.4	42.2		19.8	109.9	4.6	697.3	0.27	0.22
5	4	88.3	42.6	69.2	42.3	39.7		19.2	114.7	4.8	713.0	0.33	0.25
5	5	90.0	46.3	72.2	28.4	34.1		22.4	112.5	4.7	717.0	0.35	0.26
5	6	80.3	47.0	66.5	47.8	44.8		19.1	106.6	4.4	616.2	0.26	0.21
5	7	82.2	50.3	65.7	51.2	45.4	0.01	35.0	178.5	7.4	564.7	0.32	0.24
5	8	60.5	39.8	45.0	93.1	42.9	0.24	19.4	117.4	4.9	107.5	0.09	0.06
5	9	72.2	35.8	56.0	61.3	39.0	0.02	23.8	92.0	3.8	675.3	0.22	0.19
5	10	73.3	46.1	60.6	61.8	46.9		21.3	156.1	6.5	657.9	0.24	0.20
5	11	71.1	45.5	54.6	61.0	40.0		23.8	205.6	8.6	445.8	0.26	0.19
5	12	56.4	36.9	46.6	35.1	19.7	0.02	34.6	307.8	12.8	658.6	0.28	0.20
5	13	66.5	25.2	48.2	41.0	22.5		15.4	82.6	3.4	627.2	0.21	0.17
5	14	70.0	36.4	55.6	40.1	31.1		16.9	89.4	3.7	577.2	0.21	0.17
5	15	83.9	39.2	63.9	37.0	32.3	0.01	31.1	170.9	7.1	670.5	0.38	0.27
5	16	80.1	44.4	64.0	38.8	38.4		16.1	126.0	5.3	722.0	0.31	0.24
5	17	69.6	44.4	52.6	78.5	46.2	0.61	38.4	274.7	11.4	106.1	0.18	0.12
5	18	54.2	42.3	47.2	78.7	40.7	0.04	23.3	92.9	3.9	351.6	0.11	0.09
5	19	69.3	39.7	55.4	67.3	43.1	0.02	26.0	76.6	3.2	689.3	0.20	0.18
5	20	68.4	48.2	58.5	64.7	46.0		17.8	103.4	4.3	612.8	0.20	0.17
5	21	77.7	43.3	62.9	56.0	44.1		14.1	81.1	3.4	688.7	0.24	0.21
5	22	84.5	50.5	69.8	43.9	44.8	0.01	27.3	132.3	5.5	623.9	0.31	0.24
5	23	89.2	55.1	74.6	40.1	46.9	0.02	31.7	198.1	8.3	718.0	0.41	0.31
5	24	73.1	53.4	64.2	66.8	52.3	0.28	28.4	103.0	4.3	439.4	0.18	0.15

TABLE B10
NCWCD WEATHER STATION DATA
LONGMONT SOUTH
2000

Date		Temperature			Relative Humidity	Dew Point	Precipitation Total	Wind			Solar Radiation	ASCE Calculation	
Month	Day	Max. (°F)	Min. (°F)	Average (°F)	Average (%)	Average (°F)	(inch)	Max (mph)	Total (miles)	Average (mph)	Total (Langl)	ET_r Alfalfa (inch)	ET_o Grass (inch)
5	25	76.6	50.3	59.6	86.4	55.3	0.52	25.9	97.3	4.1	562.7	0.20	0.17
5	26	73.8	48.9	60.8	71.1	50.6	0.01	34.5	153.4	6.4	474.4	0.21	0.16
5	27	80.0	44.2	64.1	57.9	46.0		17.1	88.8	3.7	766.0	0.27	0.23
5	28	90.9	49.5	72.2	47.8	49.3		22.8	114.4	4.8	608.2	0.31	0.24
5	29	94.0	58.3	76.7	39.1	48.3		25.1	125.7	5.2	692.9	0.38	0.29
5	30	73.6	53.8	63.4	75.3	55.2		13.5	107.8	4.5	527.4	0.19	0.16
5	31	76.8	53.9	63.8	84.0	58.5		14.3	94.9	4.0	618.8	0.20	0.18
6	1	70.4	45.6	59.8	50.9	41.3		16.1	94.7	3.9	735.0	0.24	0.21
6	2	78.2	44.5	62.7	58.4	47.2		16.3	93.5	3.9	701.0	0.25	0.21
6	3	91.3	49.1	72.7	42.5	43.4		16.2	93.2	3.9	696.2	0.32	0.26
6	4	75.3	56.8	66.2	58.7	50.8	0.02	21.0	124.8	5.2	509.7	0.23	0.18
6	5	74.5	46.3	61.6	68.9	50.8		13.3	102.7	4.3	653.2	0.22	0.19
6	6	94.9	49.0	72.3	48.4	47.5		25.9	97.9	4.1	675.3	0.34	0.27
6	7	97.0	54.4	78.8	26.8	38.2		16.9	99.8	4.2	767.0	0.38	0.30
6	8	95.4	56.3	76.1	33.0	43.3		23.7	126.0	5.3	547.7	0.37	0.27
6	9	88.3	57.9	74.8	33.5	42.7		32.0	181.7	7.6	565.4	0.39	0.28
6	10	83.8	51.4	68.9	38.5	41.3		22.6	162.3	6.8	689.9	0.36	0.27
6	11	86.7	50.5	70.4	43.2	44.3		17.6	102.5	4.3	582.0	0.29	0.23
6	12	91.5	47.7	72.9	38.5	39.8		20.2	104.7	4.4	659.6	0.34	0.26
6	13	82.8	55.9	69.2	35.8	39.1		39.2	276.9	11.5	721.0	0.47	0.33
6	14	82.2	43.3	66.2	47.8	42.4		17.0	109.8	4.6	726.0	0.30	0.24
6	15	89.1	53.8	69.2	41.0	41.6		37.6	312.0	13.0	557.9	0.53	0.36
6	16	54.4	47.0	50.8	71.8	42.0		15.2	105.9	4.4	141.3	0.09	0.07
6	17	64.3	42.4	52.2	77.8	44.6	0.20	17.2	97.9	4.1	535.0	0.16	0.14
6	18	87.8	41.2	63.9	61.9	47.0	0.03	28.6	107.9	4.5	657.3	0.30	0.24
6	19	83.0	56.2	69.0	47.6	47.1	0.07	49.0	248.7	10.4	525.8	0.38	0.27
6	20	82.3	52.7	66.7	43.9	40.4	0.02	32.2	182.0	7.6	773.0	0.39	0.29
6	21	84.3	42.9	64.4	52.3	43.0		14.2	82.8	3.5	776.0	0.29	0.24
6	22	92.8	50.8	73.4	39.1	43.3		14.7	87.8	3.7	721.0	0.33	0.27

TABLE B10
NCWCD WEATHER STATION DATA
LONGMONT SOUTH
2000

Date		Temperature			Relative Humidity	Dew Point	Precipitation Total	Wind			Solar Radiation	ASCE Calculation	
Month	Day	Max. (°F)	Min. (°F)	Average (°F)	Average (%)	Average (°F)	(inch)	Max (mph)	Total (miles)	Average (mph)	Total (Langl)	ET_r Alfalfa (inch)	ET_o Grass (inch)
6	23	91.0	61.1	74.9	35.8	44.5		41.4	132.9	5.5	592.3	0.37	0.27
6	24	91.3	54.5	75.0	39.2	46.0		27.1	139.9	5.8	673.1	0.37	0.28
6	25	82.6	52.5	65.7	68.6	54.1	0.01	22.1	116.4	4.8	395.3	0.22	0.17
6	26	58.9	52.8	55.9	96.5	54.8	0.28	13.4	85.8	3.6	110.2	0.04	0.04
6	27	72.2	52.9	60.6	87.5	56.5	0.04	22.6	120.1	5.0	453.8	0.16	0.14
6	28	70.6	52.2	60.6	79.6	53.8		11.2	54.9	2.3	434.5	0.14	0.13
6	29	90.8	49.9	70.9	58.2	50.8	0.01	20.2	105.9	4.4	699.8	0.32	0.26
6	30	90.3	54.7	72.1	58.8	54.5	0.01	22.4	91.5	3.8	730.0	0.31	0.26
7	1	89.8	53.2	73.9	51.5	52.8		20.0	109.2	4.5	550.8	0.28	0.22
7	2	91.7	55.1	75.4	44.8	50.3	0.02	30.5	138.9	5.8	655.6	0.36	0.27
7	3	89.7	61.6	75.9	49.1	53.7		18.6	113.7	4.7	578.5	0.31	0.24
7	4	92.2	54.0	77.0	34.9	43.4		20.0	143.3	6.0	777.0	0.40	0.31
7	5	89.7	55.9	76.1	45.1	52.5		18.0	118.1	4.9	723.0	0.33	0.27
7	6	96.0	61.8	79.4	51.3	55.6		22.0	127.4	5.3	735.0	0.38	0.30
7	7	91.1	60.7	77.3	41.5	50.3	0.01	31.8	112.7	4.7	530.5	0.31	0.24
7	8	92.1	61.3	75.7	52.1	55.3		23.5	87.2	3.6	506.8	0.27	0.22
7	9	89.5	62.3	76.5	51.3	55.9		26.2	110.7	4.6	603.7	0.30	0.24
7	10	88.5	56.9	73.9	64.1	59.0		22.1	87.8	3.7	577.5	0.25	0.21
7	11	91.4	59.1	75.6	59.3	57.5		18.5	113.3	4.7	751.0	0.33	0.28
7	12	82.7	59.5	72.1	61.2	57.6	0.01	28.6	128.5	5.4	482.9	0.24	0.19
7	13	91.8	55.7	73.5	66.1	59.5		18.6	77.6	3.2	671.1	0.28	0.24
7	14	93.6	58.0	77.1	56.1	58.7		13.9	69.8	2.9	666.8	0.28	0.24
7	15	93.1	60.1	77.5	48.0	55.0		28.4	128.9	5.4	583.8	0.33	0.26
7	16	82.5	61.6	71.5	70.4	60.8	0.69	18.3	101.7	4.2	399.2	0.19	0.16
7	17	74.5	59.5	65.8	90.1	62.6	0.40	26.7	91.0	3.8	412.2	0.14	0.13
7	18	88.1	56.1	72.7	65.1	59.1		19.4	110.7	4.6	710.0	0.29	0.25
7	19	87.5	58.5	71.4	67.3	58.6		17.8	89.1	3.7	671.3	0.27	0.23
7	20	83.5	59.1	70.1	67.1	58.5	0.03	25.9	90.4	3.8	658.2	0.25	0.22
7	21	88.6	57.5	71.6	70.1	59.9		15.8	71.4	3.0	675.5	0.26	0.23

TABLE B10
NCWCD WEATHER STATION DATA
LONGMONT SOUTH
2000

Date		Temperature			Relative Humidity	Dew Point	Precipitation Total	Wind			Solar Radiation	ASCE Calculation	
Month	Day	Max. (°F)	Min. (°F)	Average (°F)	Average (%)	Average (°F)	(inch)	Max (mph)	Total (miles)	Average (mph)	Total (Langl)	ET_r Alfalfa (inch)	ET_o Grass (inch)
7	22	85.0	57.1	71.0	67.4	58.6		21.7	75.0	3.1	597.7	0.23	0.20
7	23	97.9	55.6	76.1	51.4	52.2		15.3	76.9	3.2	681.8	0.32	0.26
7	24	99.1	60.5	78.8	36.5	47.6		27.4	163.2	6.8	500.9	0.43	0.30
7	25	93.5	55.3	76.6	43.3	50.2		12.6	87.2	3.6	658.9	0.31	0.25
7	26	95.4	61.0	77.0	43.3	51.0		28.7	115.1	4.8	535.5	0.34	0.25
7	27	91.2	57.0	75.1	48.9	52.9		23.2	112.8	4.7	505.5	0.29	0.22
7	28	87.2	59.2	73.8	59.5	57.5		13.4	88.3	3.7	623.5	0.26	0.22
7	29	89.1	56.1	73.8	55.0	54.1		14.2	75.1	3.1	654.1	0.27	0.23
7	30	87.2	56.7	73.3	51.5	52.5		12.8	67.3	2.8	657.6	0.26	0.22
7	31	88.4	54.9	74.4	47.3	50.9		14.5	66.5	2.8	664.7	0.26	0.22
8	1	95.3	55.1	76.3	44.0	50.2	0.02	42.9	96.6	4.0	607.0	0.32	0.25
8	2	90.1	63.0	77.7	44.7	53.1		30.7	134.4	5.6	408.5	0.29	0.21
8	3	89.5	61.3	74.5	61.1	59.4		16.7	76.6	3.2	424.3	0.21	0.17
8	4	92.2	58.9	73.8	61.5	58.6		20.6	105.0	4.4	572.5	0.29	0.23
8	5	91.0	58.8	75.2	53.2	54.8		39.3	146.9	6.1	499.4	0.31	0.23
8	6	88.1	53.8	72.6	51.8	51.5		20.7	100.7	4.2	679.5	0.29	0.24
8	7	93.2	50.5	73.6	48.6	49.2		16.8	101.4	4.2	566.3	0.30	0.23
8	8	93.1	58.2	77.7	34.4	45.5		14.5	96.6	4.0	673.5	0.32	0.25
8	9	93.1	57.2	77.3	41.4	51.4		21.0	120.4	5.0	655.3	0.33	0.26
8	10	87.0	55.3	71.7	65.9	58.8		13.4	78.9	3.3	623.1	0.24	0.21
8	11	93.5	60.2	76.6	54.7	56.9		24.1	96.7	4.0	619.5	0.30	0.24
8	12	75.2	62.9	70.5	61.4	56.4		11.3	74.5	3.1	182.9	0.12	0.10
8	13	89.4	55.2	73.4	57.4	55.7		16.8	84.6	3.5	584.6	0.25	0.21
8	14	94.7	54.9	76.8	46.7	52.3		12.9	72.7	3.0	482.6	0.25	0.20
8	15	88.3	60.9	75.1	54.9	57.7	0.02	24.5	112.5	4.7	558.9	0.27	0.21
8	16	88.1	61.8	70.7	75.6	61.7	0.12	22.9	108.3	4.5	355.1	0.21	0.16
8	17	74.6	60.6	64.3	85.7	59.6	0.12	17.9	86.7	3.6	247.4	0.12	0.10
8	18	73.4	55.3	64.3	90.3	61.2	0.04	13.7	92.7	3.9	387.5	0.12	0.11
8	19	87.2	55.4	73.2	60.1	56.0	0.02	31.0	100.0	4.2	634.8	0.26	0.22

TABLE B10
NCWCD WEATHER STATION DATA
LONGMONT SOUTH
2000

Date		Temperature			Relative Humidity	Dew Point	Precipitation Total	Wind			Solar Radiation	ASCE Calculation	
Month	Day	Max. (°F)	Min. (°F)	Average (°F)	Average (%)	Average (°F)	(inch)	Max (mph)	Total (miles)	Average (mph)	Total (Langl)	ET_r Alfalfa (inch)	ET_o Grass (inch)
8	20	83.4	54.1	69.7	63.9	56.3	0.02	24.8	101.1	4.2	377.4	0.19	0.15
8	21	77.6	51.4	65.2	70.4	55.3		15.2	96.5	4.0	449.8	0.17	0.15
8	22	85.0	53.8	67.4	68.4	55.0	0.01	29.5	126.6	5.3	487.2	0.25	0.19
8	23	84.7	51.9	69.3	60.4	52.8		15.1	80.9	3.4	569.1	0.23	0.19
8	24	88.5	53.3	71.1	56.9	54.0		17.0	80.3	3.3	594.7	0.25	0.20
8	25	87.0	57.3	70.8	61.7	56.2	0.11	21.0	101.2	4.2	454.8	0.23	0.18
8	26	86.1	56.0	69.3	69.1	58.0	0.03	27.0	92.2	3.8	439.4	0.21	0.17
8	27	85.9	55.8	69.5	73.2	59.2		17.2	98.2	4.1	533.7	0.22	0.18
8	28	85.8	54.8	68.7	75.2	59.4	0.12	23.4	95.5	4.0	413.9	0.19	0.16
8	29	84.6	57.6	67.9	81.5	61.5	0.03	20.7	105.8	4.4	431.4	0.19	0.16
8	30	83.9	54.4	67.0	74.9	57.9	0.03	29.0	109.9	4.6	412.7	0.20	0.16
8	31	69.6	48.7	59.4	86.4	55.3		13.7	78.7	3.3	312.2	0.10	0.09
9	1	80.0	49.9	64.3	79.5	56.8		18.9	72.9	3.0	422.7	0.16	0.13
9	2	82.7	51.4	66.3	63.7	51.7		17.3	101.9	4.2	589.2	0.24	0.19
9	3	83.1	49.4	66.9	50.4	46.9		14.7	88.5	3.7	490.5	0.22	0.17
9	4	87.8	48.8	69.9	55.1	51.3		20.7	91.0	3.8	533.2	0.24	0.19
9	5	89.5	53.5	70.2	64.8	55.8	0.02	32.1	110.1	4.6	457.7	0.24	0.19
9	6	85.4	53.5	68.7	60.6	51.8	0.02	36.5	127.7	5.3	359.5	0.23	0.17
9	7	82.0	46.2	62.3	62.4	48.4		17.4	90.4	3.8	561.1	0.22	0.18
9	8	83.2	53.3	67.8	56.8	51.1	0.09	39.3	112.3	4.7	400.6	0.22	0.16
9	9	86.4	53.3	73.7	30.7	39.2	0.03	30.0	264.3	11.0	519.1	0.42	0.28
9	10	90.2	51.3	70.4	35.9	38.9		24.5	139.4	5.8	533.7	0.34	0.24
9	11	79.8	50.3	67.0	37.2	39.1		14.6	114.2	4.8	383.7	0.23	0.17
9	12	85.9	43.9	64.9	50.2	42.5		12.3	74.8	3.1	552.6	0.23	0.18
9	13	90.8	47.1	70.4	39.6	40.8		15.6	96.2	4.0	545.4	0.27	0.20
9	14	82.0	50.4	66.8	45.3	44.0		14.3	92.9	3.9	528.0	0.23	0.17
9	15	91.2	46.9	69.3	48.6	45.6		11.5	72.7	3.0	534.0	0.23	0.18
9	16	94.5	53.7	75.6	28.5	37.1		14.2	81.9	3.4	529.0	0.27	0.20
9	17	93.4	52.3	73.1	34.5	41.1		16.2	83.4	3.5	368.4	0.24	0.17

TABLE B10
NCWCD WEATHER STATION DATA
LONGMONT SOUTH
2000

Date		Temperature			Relative Humidity	Dew Point	Precipitation Total	Wind			Solar Radiation	ASCE Calculation	
Month	Day	Max. (°F)	Min. (°F)	Average (°F)	Average (%)	Average (°F)	(inch)	Max (mph)	Total (miles)	Average (mph)	Total (Langl)	ET_r Alfalfa (inch)	ET_o Grass (inch)
9	18	82.3	59.7	70.0	41.3	44.8		17.4	91.5	3.8	386.4	0.21	0.16
9	19	76.6	47.2	64.9	52.5	46.1	0.19	22.6	155.2	6.5	433.2	0.21	0.16
9	20	55.7	43.2	49.1	80.7	43.0	0.37	20.5	117.3	4.9	248.9	0.08	0.07
9	21	74.4	39.1	53.9	80.5	47.2	0.06	30.3	126.5	5.3	341.1	0.16	0.12
9	22	49.6	33.0	40.7	99.9	40.7	0.06	14.3	152.3	6.3	90.7	0.03	0.03
9	23	39.0	32.4	34.7	101.6	34.7	0.42	13.6	93.9	3.9	112.8	0.03	0.03
9	24	45.8	30.6	35.9	91.2	33.0	0.33	9.4	58.2	2.4	361.3	0.07	0.06
9	25	65.8	29.5	46.0	71.1	34.9		12.1	62.6	2.6	510.7	0.13	0.11
9	26	72.0	34.0	52.3	65.9	39.0		15.1	76.3	3.2	500.2	0.16	0.12
9	27	74.2	38.6	57.1	57.5	39.4		13.4	87.6	3.6	493.1	0.17	0.13
9	28	81.8	39.0	58.7	60.3	42.5		9.8	57.4	2.4	460.8	0.17	0.13
9	29	80.1	47.0	63.9	58.6	47.7	0.02	37.8	140.8	5.9	321.9	0.20	0.14
9	30	80.0	53.8	66.4	49.3	45.5		27.5	117.0	4.9	393.0	0.21	0.15
10	1	83.9	56.3	70.7	34.1	39.8		29.8	156.8	6.5	381.5	0.29	0.19
10	2	74.5	41.5	57.7	72.1	48.1		18.9	80.2	3.3	418.1	0.14	0.11
10	3	75.8	45.5	57.8	69.0	47.1		24.5	117.4	4.9	365.9	0.17	0.13
10	4	59.7	44.7	52.0	90.3	49.1		18.9	94.4	3.9	244.6	0.07	0.06
10	5	53.0	33.0	41.0	99.4	41.1	0.08	26.6	174.4	7.3	93.2	0.05	0.04
10	6	36.5	31.0	33.5	99.6	33.2	0.04	11.2	111.2	4.6	98.6	0.02	0.02
10	7	42.8	34.9	38.7	91.8	36.3		8.4	59.7	2.5	107.0	0.03	0.03
10	8	54.0	28.4	41.1	81.8	35.5	0.01	9.9	59.4	2.5	385.7	0.08	0.07
10	9	63.8	26.8	43.5	80.5	37.1		10.0	47.7	2.0	419.1	0.09	0.08
10	10	70.5	32.3	50.0	71.5	39.9		14.7	78.7	3.3	409.3	0.13	0.10
10	11	72.2	32.8	54.4	66.0	41.9	0.02	25.6	92.1	3.8	419.5	0.14	0.11
10	12	67.3	41.5	55.4	63.1	42.3		12.8	103.0	4.3	405.9	0.13	0.10
10	13	63.6	40.0	52.8	54.5	34.9	0.01	28.5	143.0	6.0	398.9	0.16	0.11
10	14	59.8	34.8	47.0	63.9	34.4		18.9	92.9	3.9	320.3	0.11	0.08
10	15	61.6	29.4	44.5	71.8	34.7		11.7	79.1	3.3	399.9	0.10	0.08
10	16	66.1	32.0	48.6	60.4	33.8		15.0	80.0	3.3	396.0	0.12	0.09

TABLE B10
NCWCD WEATHER STATION DATA
LONGMONT SOUTH
2000

Date		Temperature			Relative Humidity	Dew Point	Precipitation Total	Wind			Solar Radiation	ASCE Calculation	
Month	Day	Max. (°F)	Min. (°F)	Average (°F)	Average (%)	Average (°F)	(inch)	Max (mph)	Total (miles)	Average (mph)	Total (Langl)	ET_r Alfalfa (inch)	ET_o Grass (inch)
10	17	69.2	35.5	51.3	54.8	34.2		11.3	64.3	2.7	393.6	0.12	0.09
10	18	74.1	34.3	53.2	57.4	36.7		10.6	66.3	2.8	390.5	0.13	0.10
10	19	75.3	36.1	55.7	45.2	32.0		17.2	82.0	3.4	368.3	0.16	0.11
10	20	64.9	35.1	50.7	57.9	35.7		11.0	71.9	3.0	372.2	0.11	0.08
10	21	71.0	31.0	50.7	62.5	36.7		13.4	68.6	2.9	355.9	0.12	0.09
10	22	50.5	40.6	43.9	93.4	41.9	0.23	25.2	162.6	6.8	35.1	0.04	0.03
10	23	51.1	40.5	44.6	96.1	43.4	0.01	8.6	59.3	2.5	123.3	0.04	0.03
10	24	59.7	40.3	49.0	92.5	46.6		13.2	80.2	3.3	228.2	0.06	0.05
10	25	65.8	34.0	47.7	69.2	36.3	0.01	12.9	80.3	3.3	287.4	0.11	0.08
10	26	62.8	33.3	47.7	63.4	34.6		11.1	66.8	2.8	356.5	0.09	0.07
10	27	58.5	33.8	46.0	81.7	40.8		9.6	62.0	2.6	284.7	0.06	0.05
10	28	57.0	38.9	47.3	93.9	45.7		11.9	91.9	3.8	143.0	0.04	0.04
10	29	65.8	33.4	51.6	69.7	40.5	0.03	22.3	141.2	5.9	328.8	0.12	0.08
10	30	60.5	33.1	45.3	75.0	37.9		13.4	77.9	3.2	290.5	0.08	0.06
10	31	46.2	32.4	40.3	95.0	39.2	0.05	24.3	88.9	3.7	56.4	0.02	0.02
11	1	55.3	37.1	44.8	53.3	28.1	0.07	40.6	217.9	9.1	311.5		
11	2	49.3	30.2	38.2	74.7	30.1		19.9	117.6	4.9	259.9		
11	3	46.1	27.9	35.4	86.4	31.5	0.01	10.1	68.1	2.8	228.5		
11	4	55.3	21.6	37.5	77.8	30.3	0.01	7.7	53.6	2.2	324.5		
11	5	42.5	25.1	33.9	96.3	32.8	0.33	23.5	107.5	4.5	47.5		
11	6	33.0	22.3	27.6	88.1	24.5		15.1	85.9	3.6	138.5		
11	7	38.3	16.8	28.4	75.9	21.4		10.2	82.8	3.5	236.9		
11	8	44.2	22.9	32.9	65.6	21.8		19.1	99.1	4.1	313.0		
11	9	44.1	22.3	32.1	72.2	23.6		21.6	123.4	5.1	285.2		
11	10	26.9	21.4	24.2	87.8	21.1		17.5	158.7	6.6	82.8		
11	11	22.5	5.3	16.0	96.9	15.7	0.06	13.8	118.0	4.9	217.2		
11	12	25.1	4.2	13.7	92.7	12.2	0.01	9.6	53.8	2.2	250.3		
11	13	28.6	1.1	14.7	85.7	11.8		8.8	73.2	3.0	298.8		
11	14	36.0	4.3	19.7	78.8	14.1	0.01	8.3	54.1	2.3	303.7		

TABLE B10
NCWCD WEATHER STATION DATA
LONGMONT SOUTH
2000

Date		Temperature			Relative Humidity	Dew Point	Precipitation Total	Wind			Solar Radiation	ASCE Calculation	
Month	Day	Max. (°F)	Min. (°F)	Average (°F)	Average (%)	Average (°F)	(inch)	Max (mph)	Total (miles)	Average (mph)	Total (Langl)	ET_r Alfalfa (inch)	ET_o Grass (inch)
11	15	40.8	12.0	26.5	67.9	16.6	0.04	24.2	147.6	6.2	243.6		
11	16	32.2	14.8	22.3	73.2	14.8		12.2	87.2	3.6	282.0		
11	17	34.2	8.5	20.3	81.5	15.0		21.2	111.9	4.7	238.2		
11	18	46.2	4.4	25.2	69.3	16.3		20.1	101.6	4.2	271.9		
11	19	42.8	15.8	29.8	70.2	20.5		14.5	113.7	4.7	274.2		
11	20	47.2	14.0	28.1	76.0	20.8		8.6	49.8	2.1	276.1		
11	21	53.7	18.6	35.0	59.2	20.2		12.5	72.1	3.0	251.8		
11	22	52.7	25.7	36.9	60.0	22.9		8.1	57.2	2.4	219.5		
11	23	47.0	23.1	34.1	60.3	20.8		8.8	69.6	2.9	238.7		
11	24	53.9	18.8	34.4	57.4	19.0		7.8	58.3	2.4	268.3		
11	25	45.0	20.1	33.0	65.5	21.8		14.6	88.3	3.7	256.7		
11	26	53.8	17.7	34.6	64.0	22.3	0.02	28.1	132.0	5.5	100.8		
11	27	46.1	22.9	35.4	70.9	26.4		24.5	86.1	3.6	237.7		
11	28	43.8	18.9	33.7	64.5	23.0	0.01	35.8	148.6	6.2	237.1		
11	29	42.0	16.6	26.4	70.8	17.5		8.4	54.8	2.3	237.8		
11	30	51.4	16.6	37.0	47.7	15.4	0.01	52.4	403.5	16.8	255.6		
12	1	43.7	17.9	30.7	51.7	13.9		13.1	81.0	3.4	247.3		
12	2	46.0	15.0	28.6	64.3	17.0		10.6	71.1	3.0	245.7		
12	3	55.2	14.4	33.2	60.5	18.1		20.3	102.2	4.3	170.9		
12	4	41.8	19.9	30.1	62.8	18.2		12.1	81.4	3.4	239.9		
12	5	53.4	17.1	30.1	75.8	22.2		34.3	167.9	7.0	100.6		
12	6	53.3	11.8	32.3	70.6	22.3		12.8	84.8	3.5	227.2		
12	7	57.5	33.5	46.7	43.8	24.3		28.7	173.0	7.2	110.1		
12	8	40.1	21.0	31.3	85.7	27.5		8.3	58.5	2.4	192.6		
12	9	56.5	25.9	39.5	62.2	25.2		28.5	107.1	4.5	190.3		
12	10	44.9	8.3	19.6	93.5	17.9	0.16	23.1	128.8	5.4	28.3		
12	11	9.7	-5.5	3.9	92.0	2.5	0.01	12.2	87.5	3.6	233.6		
12	12	21.4	-4.0	8.1	91.9	7.3		5.3	49.1	2.0	209.5		
12	13	22.6	0.5	13.2	91.2	11.7		10.4	56.2	2.3	228.3		

TABLE B10
NCWCD WEATHER STATION DATA
LONGMONT SOUTH
2000

Date		Temperature			Relative Humidity	Dew Point	Precipitation Total	Wind			Solar Radiation	ASCE Calculation	
Month	Day	Max. (°F)	Min. (°F)	Average (°F)	Average (%)	Average (°F)	(inch)	Max (mph)	Total (miles)	Average (mph)	Total (Langl)	ET_r Alfalfa (inch)	ET_o Grass (inch)
12	14	47.7	5.1	30.7	64.6	19.3	0.03	40.5	221.0	9.2	231.0		
12	15	47.5	25.2	35.9	51.0	19.2	0.01	40.1	186.6	7.8	146.8		
12	16	31.8	13.3	21.4	68.4	12.2		19.3	132.8	5.5	232.1		
12	17	57.8	13.2	29.8	58.5	15.5		43.8	249.0	10.4	201.0		
12	18	41.6	13.8	26.6	43.7	5.6		25.2	140.6	5.9	215.6		
12	19	55.5	14.6	36.6	38.8	10.0	0.01	36.2	163.7	6.8	156.8		
12	20	44.9	4.9	23.6	75.7	16.5	0.01	32.0	164.8	6.9	141.4		
12	21	27.8	-0.1	14.1	80.4	9.5	0.01	6.9	52.4	2.2	223.3		
12	22	54.6	9.7	36.2	56.3	20.0	0.01	30.9	208.6	8.7	232.7		
12	23	45.4	17.9	29.7	77.1	22.7		14.2	62.9	2.6	225.8		
12	24	37.8	15.7	25.9	80.8	20.7		10.8	87.9	3.7	169.1		
12	25	26.2	17.8	22.5	94.8	21.3	0.02	8.0	49.0	2.0	75.1		
12	26	41.7	8.0	24.3	82.1	19.2	0.01	6.6	51.7	2.2	224.4		
12	27	57.7	16.8	39.5	57.9	24.5		22.9	116.0	4.8	230.0		
12	28	52.4	23.7	36.2	59.5	22.7		22.4	153.5	6.4	197.5		
12	29	38.7	15.2	26.9	69.8	17.5		16.2	91.2	3.8	225.8		
12	30	36.2	13.0	25.5	77.4	19.2		9.0	56.1	2.3	128.0		
12	31	37.2	15.4	26	95.5	25		11.8	72.2	3	207.5		
							9.53						**41.00**

TABLE B11
NCWCD WEATHER STATION DATA
LONGMONT SOUTH
1999

Date		Temperature			Relative Humidity	Dew Point	Precipitation Total	Wind			Solar Radiation	ASCE Calculation	
Month	Day	Max. (°F)	Min. (°F)	Average (°F)	Average (%)	Average (°F)	(inch)	Max (mph)	Total (miles)	Average (mph)	Total (Langl)	ET_r Alfalfa (inch)	ET_o Grass (inch)
1	1	46.6	20.1	32.8	86.6	29.1	0.03	21.6	143.6	6.0	120.1		
1	2	27.4	7.0	18.2	93.4	16.8	0.05	14.3	93.2	3.9	175.1		
1	3	23.6	6.7	15.7	77.2	9.6		9.9	97.9	4.1	194.7		
1	4	46.0	11.4	25.3	77.1	18.6	0.03	34.3	165.9	6.9	181.6		
1	5	52.5	39.4	45.1	42.8	23.7	0.01	35.0	363.8	15.2	166.8		
1	6	57.9	24.0	38.4	64.4	24.9		34.3	193.1	8.0	197.0		
1	7	49.5	23.4	31.9	87.9	28.5		17.0	111.4	4.6	228.2		
1	8	34.1	18.9	28.0	91.5	26.0		14.9	119.0	5.0	100.5		
1	9	50.2	17.2	31.6	72.1	21.0		29.6	166.9	7.0	209.0		
1	10	53.2	27.3	41.0	51.5	22.4	0.01	39.2	194.8	8.1	245.1		
1	11	62.3	46.3	55.5	25.0	19.9		50.3	364.1	15.2	181.9		
1	12	53.4	21.8	42.6	46.3	21.5		24.9	135.2	5.6	137.5		
1	13	44.5	20.1	31.0	83.1	25.9		21.6	92.9	3.9	124.7		
1	14	59.4	23.1	45.6	32.9	9.8		36.8	337.6	14.1	133.0		
1	15	61.3	35.2	53.0	19.1	11.0		39.5	310.6	12.9	194.0		
1	16	54.1	17.9	36.6	60.6	23.0		36.4	153.7	6.4	194.6		
1	17	44.1	26.3	35.3	39.5	12.3		33.5	209.9	8.7	253.8		
1	18	62.5	19.1	42.6	48.4	24.6	0.01	48.1	301.0	12.5	215.7		
1	19	57.6	28.2	41.6	67.7	30.3		19.1	145.6	6.1	254.5		
1	20	57.5	28.4	40.6	60.7	26.2		15.7	92.3	3.8	197.5		
1	21	42.1	24.3	32.6	83.9	28.2	0.01	24.3	198.6	8.3	90.4		
1	22	40.9	17.5	30.0	73.9	22.3	0.01	20.0	91.3	3.8	281.5		
1	23	58.2	17.8	40.3	53.0	20.9	0.01	39.8	239.2	10.0	289.4		
1	24	52.5	20.4	29.3	87.9	25.2	0.04	21.5	115.9	4.8	69.8		
1	25	33.3	15.2	25.2	94.0	24.0	0.01	6.1	48.6	2.0	184.0		
1	26	52.8	17.6	32.8	68.3	21.2	0.03	49.7	228.4	9.5	236.1		
1	27	44.0	20.5	32.8	61.5	20.5		18.8	115.7	4.8	259.3		
1	28	42.9	18.4	28.7	77.1	21.6		9.6	72.4	3.0	279.0		
1	29	49.1	14.4	30.4	57.2	15.0		11.7	76.1	3.2	298.8		

TABLE B11
NCWCD WEATHER STATION DATA
LONGMONT SOUTH
1999

Date		Temperature			Relative Humidity	Dew Point	Precipitation Total	Wind			Solar Radiation	ASCE Calculation	
Month	Day	Max. (°F)	Min. (°F)	Average (°F)	Average (%)	Average (°F)	(inch)	Max (mph)	Total (miles)	Average (mph)	Total (Langl)	ET_r Alfalfa (inch)	ET_o Grass (inch)
1	30	45.9	17.7	31.6	68.0	21.5		10.4	57.5	2.4	118.3		
1	31	44.2	20.8	32.6	81.6	27.6		10.1	67.3	2.8	272.3		
2	1	49.0	21.0	34.1	62.4	21.0		33.8	167.0	7.0	129.3		
2	2	54.3	22.0	41.3	30.4	10.7		45.3	298.4	12.4	255.0		
2	3	55.6	24.6	45.0	28.3	12.6	0.03	58.4	385.2	16.1	303.1		
2	4	59.7	19.1	38.3	50.7	19.7		12.1	87.9	3.7	311.6		
2	5	53.8	24.5	40.5	56.9	25.6		17.6	105.4	4.4	306.5		
2	6	53.8	23.0	38.0	63.5	25.1		18.2	84.1	3.5	287.4		
2	7	68.0	36.4	53.1	34.8	25.2		37.8	225.0	9.4	271.9		
2	8	65.3	27.2	50.3	34.9	22.3	0.01	33.8	260.9	10.9	332.0		
2	9	61.7	21.7	41.9	46.7	21.2		17.2	93.7	3.9	343.0		
2	10	69.1	23.5	46.6	42.8	20.6	0.04	37.2	318.6	13.3	305.9		
2	11	31.9	15.7	24.6	37.5	1.8		31.4	255.1	10.6	368.3		
2	12	48.5	10.0	32.7	41.2	11.0		23.7	115.0	4.8	341.6		
2	13	72.9	18.5	42.5	39.2	14.3		11.5	71.7	3.0	367.2		
2	14	65.3	20.7	45.0	30.5	12.3		48.8	202.7	8.4	289.6		
2	15	45.0	24.9	36.1	58.8	22.1		17.8	104.9	4.4	188.1		
2	16	44.0	16.3	31.4	73.6	22.7		17.2	84.1	3.5	221.1		
2	17	54.3	21.0	37.6	44.2	17.0	0.01	35.7	195.1	8.1	270.7		
2	18	48.1	22.9	36.3	30.3	7.4		23.2	149.7	6.2	367.8		
2	19	52.4	18.7	35.1	40.4	12.2		38.4	216.0	9.0	358.0		
2	20	47.0	17.2	32.4	44.0	11.8		18.8	104.5	4.4	374.7		
2	21	45.6	14.5	30.3	57.7	16.0		13.7	71.9	3.0	354.4		
2	22	43.5	28.3	34.7	35.6	9.5	0.01	50.5	341.7	14.2	238.8		
2	23	59.6	31.6	45.2	26.2	11.9		43.8	269.3	11.2	393.9		
2	24	63.1	31.4	48.9	31.1	18.6		27.6	145.8	6.1	289.5		
2	25	66.5	27.6	48.0	32.0	15.8		16.7	102.0	4.3	384.9		
2	26	58.6	30.9	47.1	25.5	12.1		37.5	395.9	16.5	426.5		
2	27	55.9	19.5	39.2	25.1	4.6		21.4	130.3	5.4	436.1		

TABLE B11
NCWCD WEATHER STATION DATA
LONGMONT SOUTH
1999

Date		Temperature			Relative Humidity	Dew Point	Precipitation Total	Wind			Solar Radiation	ASCE Calculation	
Month	Day	Max. (°F)	Min. (°F)	Average (°F)	Average (%)	Average (°F)	(inch)	Max (mph)	Total (miles)	Average (mph)	Total (Langl)	ET_r Alfalfa (inch)	ET_o Grass (inch)
2	28	65.7	24.7	49.0	30.6	18.0		32.8	256.3	10.7	394.7		
3	1	69.7	41.4	54.7	26.9	19.9		32.0	234.1	9.8	380.4	0.17	0.19
3	2	46.3	18.8	33.9	57.9	19.9		22.9	98.7	4.1	307.2	0.09	0.08
3	3	68.1	15.9	42.8	33.5	11.3		29.8	113.7	4.7	399.5	0.14	0.14
3	4	50.6	26.1	38.8	58.3	24.1	0.14	23.0	117.2	4.9	354.9	0.09	0.08
3	5	39.5	16.6	30.5	71.4	21.7	0.18	34.6	151.5	6.3	391.5	0.08	0.06
3	6	40.6	21.0	28.5	76.6	21.8		15.5	106.6	4.4	398.2	0.08	0.07
3	7	49.1	18.9	34.1	74.4	26.3		17.4	95.8	4.0	444.9	0.08	0.07
3	8	52.8	30.6	40.1	54.7	22.9		31.0	186.3	7.8	441.7	0.11	0.10
3	9	55.2	18.7	39.3	53.0	22.6		37.8	122.7	5.1	423.4	0.09	0.09
3	10	57.2	29.6	44.3	41.9	19.9		25.9	189.8	7.9	421.1	0.13	0.12
3	11	44.6	22.7	31.2	79.1	24.9		24.5	198.3	8.3	319.4	0.09	0.07
3	12	30.5	26.2	27.8	98.9	27.5	0.19	22.0	144.9	6.0	293.8	0.06	0.04
3	13	54.1	14.5	34.5	69.5	23.4	0.01	9.7	61.0	2.5	497.1	0.09	0.09
3	14	70.3	26.1	47.7	49.4	26.1	0.01	14.1	77.3	3.2	492.4	0.10	0.10
3	15	70.7	35.6	51.7	39.7	23.8		14.5	88.5	3.7	263.3	0.08	0.09
3	16	72.4	33.3	55.8	26.3	16.7	0.03	34.7	228.5	9.5	458.0	0.19	0.20
3	17	50.1	26.8	39.0	48.7	20.2		20.4	131.5	5.5	482.7	0.14	0.12
3	18	57.6	21.8	39.3	51.7	21.1		22.6	108.1	4.5	483.0	0.14	0.12
3	19	58.4	27.4	42.3	65.6	30.9		13.1	87.2	3.6	508.7	0.12	0.11
3	20	67.5	27.1	48.3	50.5	26.9		14.5	76.4	3.2	514.2	0.12	0.12
3	21	72.4	28.8	48.8	49.3	27.8		34.8	140.5	5.9	504.6	0.17	0.17
3	22	63.3	26.6	44.6	65.8	31.7		21.9	115.4	4.8	444.9	0.13	0.12
3	23	64.7	25.2	46.4	55.3	27.5		14.5	80.0	3.3	501.5	0.13	0.12
3	24	64.7	29.4	48.1	60.0	33.0		18.0	111.7	4.7	494.9	0.14	0.13
3	25	67.0	30.9	47.8	63.8	34.3		16.8	105.6	4.4	519.3	0.14	0.13
3	26	74.3	28.3	52.9	50.2	29.4		21.2	128.7	5.4	461.6	0.16	0.16
3	27	65.4	40.2	52.2	43.0	30.5	0.02	40.3	271.4	11.3	359.9	0.19	0.17
3	28	58.0	31.0	44.0	35.2	17.4		23.5	168.7	7.0	458.2	0.17	0.15

TABLE B11
NCWCD WEATHER STATION DATA
LONGMONT SOUTH
1999

Date		Temperature			Relative Humidity	Dew Point	Precipitation Total	Wind			Solar Radiation	ASCE Calculation	
Month	Day	Max. (°F)	Min. (°F)	Average (°F)	Average (%)	Average (°F)	(inch)	Max (mph)	Total (miles)	Average (mph)	Total (Langl)	ET_r Alfalfa (inch)	ET_o Grass (inch)
3	29	70.1	21.8	46.3	41.2	18.5		19.3	110.4	4.6	559.8	0.18	0.17
3	30	77.4	32.0	57.2	20.8	11.9		34.0	202.7	8.4	553.5	0.23	0.24
3	31	70.7	34.9	55.4	26.5	19.8		28.3	155.7	6.5	498.8	0.18	0.18
4	1	46.5	25.0	35.4	89.0	32.4	0.18	19.1	175.3	7.3	85.9	0.06	0.05
4	2	30.3	22.7	25.3	100.0	25.2	0.21	11.8	118.9	5.0	326.8	0.08	0.06
4	3	42.9	21.8	29.8	87.3	26.1	0.02	16.1	101.4	4.2	479.1	0.10	0.08
4	4	51.3	25.4	37.5	70.3	27.4	0.01	22.3	92.2	3.8	462.5	0.09	0.08
4	5	57.4	32.3	43.6	60.2	28.5		25.6	176.0	7.3	596.6	0.15	0.13
4	6	65.3	27.9	47.0	48.4	26.3		17.1	107.1	4.5	597.4	0.15	0.14
4	7	72.9	34.5	55.1	35.9	26.7	0.05	39.2	199.5	8.3	571.2	0.21	0.20
4	8	63.3	40.3	52.0	35.6	24.7		46.5	321.8	13.4	580.5	0.25	0.22
4	9	65.3	29.3	45.2	52.4	27.1		42.7	224.0	9.3	452.4	0.21	0.18
4	10	54.7	32.6	43.4	25.4	10.0	0.01	48.5	345.5	14.4	415.3	0.24	0.19
4	11	60.0	20.5	43.0	43.6	20.8		16.7	102.9	4.3	558.3	0.16	0.14
4	12	68.1	29.7	51.7	41.0	26.8		13.4	88.1	3.7	537.7	0.15	0.14
4	13	69.3	36.6	54.3	53.4	36.5	0.05	32.2	156.5	6.5	547.1	0.18	0.16
4	14	48.9	30.9	39.8	84.7	35.9	0.18	37.3	295.3	12.3	184.4	0.08	0.06
4	15	39.9	24.1	31.2	69.2	20.9	0.08	32.1	288.3	12.0	483.0	0.15	0.10
4	16	39.8	20.4	30.1	64.4	19.1	0.01	38.7	192.4	8.0	199.7	0.09	0.07
4	17	56.7	17.7	38.1	55.0	21.3		16.0	137.9	5.7	658.0	0.17	0.14
4	18	72.6	35.5	56.7	35.1	26.7		34.0	190.4	7.9	549.5	0.19	0.18
4	19	75.0	38.9	59.1	38.6	31.0		24.5	127.8	5.3	515.7	0.17	0.16
4	20	71.8	41.8	57.8	45.1	35.7		19.6	102.5	4.3	344.9	0.14	0.13
4	21	63.5	37.5	51.4	61.6	36.8	0.11	26.7	139.0	5.8	468.9	0.17	0.14
4	22	42.4	32.4	36.8	98.5	36.4	1.53	20.6	137.7	5.7	273.7	0.09	0.06
4	23	42.5	31.7	34.5	91.9	31.8	0.46	14.7	90.1	3.8	339.5	0.10	0.08
4	24	45.9	33.5	40.0	87.4	36.5		14.0	82.8	3.5	273.2	0.07	0.05
4	25	49.0	32.8	41.3	91.6	38.8	0.24	13.2	103.8	4.3	311.1	0.07	0.05
4	26	57.7	33.1	44.9	85.3	40.4		12.7	98.6	4.1	420.0	0.10	0.08

TABLE B11
NCWCD WEATHER STATION DATA
LONGMONT SOUTH
1999

Date		Temperature			Relative Humidity	Dew Point	Precipitation Total	Wind			Solar Radiation	ASCE Calculation	
Month	Day	Max. (°F)	Min. (°F)	Average (°F)	Average (%)	Average (°F)	(inch)	Max (mph)	Total (miles)	Average (mph)	Total (Langl)	ET_r Alfalfa (inch)	ET_o Grass (inch)
4	27	70.9	38.8	53.4	72.4	43.3	0.01	18.5	112.3	4.7	502.7	0.15	0.13
4	28	57.6	38.8	50.0	88.4	46.9	0.07	27.6	131.6	5.5	240.2	0.06	0.05
4	29	52.5	44.6	47.6	96.3	46.5	0.69	27.0	190.6	7.9	92.5	0.04	0.03
4	30	45.8	40.3	43.4	99.4	43.2	1.22	15.8	125.0	5.2	61.3	0.03	0.02
5	1	51.7	37.2	42.5	95.7	41.2	0.38	23.1	92.2	3.8	203.1	0.07	0.05
5	2	64.4	34.8	48.5	77.2	40.1	0.03	22.9	97.3	4.1	493.1	0.14	0.12
5	3	66.7	38.0	52.0	66.5	38.6	0.01	31.2	157.9	6.6	430.7	0.16	0.13
5	4	58.7	36.0	48.2	46.9	27.4	0.01	35.4	259.6	10.8	674.3	0.25	0.18
5	5	54.6	32.8	44.0	44.6	23.2		30.5	230.3	9.6	425.4	0.19	0.15
5	6	58.8	26.7	44.3	41.3	21.2		15.2	110.0	4.6	724.0	0.22	0.17
5	7	75.1	37.3	54.8	41.6	30.6		14.0	120.6	5.0	736.0	0.26	0.21
5	8	78.4	41.2	62.9	38.9	35.3		20.8	151.8	6.3	557.3	0.22	0.19
5	9	79.0	42.8	62.1	43.9	37.9		21.3	136.8	5.7	579.8	0.24	0.20
5	10	53.5	34.5	43.8	63.0	31.5	0.07	40.5	230.5	9.6	523.1	0.20	0.14
5	11	56.0	31.7	44.6	46.5	24.2		23.8	176.0	7.3	634.8	0.23	0.17
5	12	67.3	29.1	50.8	48.7	29.9		20.0	112.1	4.7	683.1	0.22	0.18
5	13	75.8	37.9	56.3	58.9	41.8		29.5	148.4	6.2	568.6	0.21	0.17
5	14	69.7	43.4	57.1	60.8	43.0	0.08	30.0	142.3	5.9	612.9	0.21	0.17
5	15	71.9	46.8	59.2	52.4	40.3	0.01	25.4	157.5	6.6	625.1	0.24	0.20
5	16	56.9	39.0	47.9	79.7	41.7	0.42	22.0	152.7	6.4	322.1	0.13	0.10
5	17	61.6	34.1	48.4	72.2	38.5	0.01	16.0	92.7	3.9	735.0	0.21	0.17
5	18	76.8	36.7	57.2	59.3	40.4		15.1	81.0	3.4	701.0	0.24	0.19
5	19	80.8	44.2	64.4	48.1	42.5	0.01	24.3	115.9	4.8	576.6	0.22	0.18
5	20	66.6	52.5	58.5	73.2	49.8	0.01	28.9	148.9	6.2	471.6	0.18	0.14
5	21	79.8	47.7	63.1	69.6	51.0		15.0	74.4	3.1	654.7	0.23	0.19
5	22	78.5	46.8	62.7	66.7	50.3	0.08	31.2	125.6	5.2	627.3	0.24	0.19
5	23	72.3	55.0	60.8	82.7	55.1	0.01	9.9	75.6	3.1	469.2	0.17	0.14
5	24	69.9	51.1	59.8	78.3	52.8	0.02	20.0	123.8	5.2	463.9	0.18	0.14
5	25	62.1	46.2	55.2	83.7	50.2		20.0	101.0	4.2	331.6	0.12	0.10

TABLE B11
NCWCD WEATHER STATION DATA
LONGMONT SOUTH
1999

Date		Temperature			Relative Humidity	Dew Point	Precipitation Total	Wind			Solar Radiation	ASCE Calculation	
Month	Day	Max. (°F)	Min. (°F)	Average (°F)	Average (%)	Average (°F)	(inch)	Max (mph)	Total (miles)	Average (mph)	Total (Langl)	ET_r Alfalfa (inch)	ET_o Grass (inch)
5	26	74.0	40.1	58.9	69.4	47.8		14.3	82.1	3.4	683.0	0.23	0.18
5	27	67.0	52.2	57.5	79.4	51.1		17.9	105.8	4.4	357.8	0.14	0.11
5	28	77.8	41.9	60.8	69.4	48.6		14.8	71.9	3.0	720.0	0.24	0.19
5	29	80.2	46.4	61.6	67.5	49.5	0.03	35.7	114.6	4.8	549.9	0.23	0.18
5	30	79.6	49.7	64.7	63.4	50.3		21.3	110.4	4.6	613.0	0.24	0.19
5	31	66.9	49.0	56.6	75.7	48.9		39.8	174.0	7.3	415.2	0.19	0.14
6	1	75.8	43.1	61.1	51.2	42.2		25.0	108.9	4.5	679.0	0.26	0.20
6	2	80.6	46.0	64.2	57.8	47.8		31.8	126.2	5.3	610.7	0.26	0.20
6	3	80.6	43.4	63.8	52.2	44.5		13.1	99.2	4.1	690.9	0.27	0.21
6	4	83.2	44.3	65.4	45.1	42.1		18.9	102.1	4.3	667.1	0.29	0.22
6	5	68.5	47.1	55.3	67.6	44.5		28.6	146.0	6.1	404.6	0.21	0.16
6	6	73.5	43.6	60.8	47.1	39.6	0.01	35.8	152.0	6.3	594.6	0.26	0.20
6	7	88.3	44.1	67.8	42.2	39.7		21.7	130.3	5.4	727.0	0.34	0.26
6	8	90.2	48.7	72.8	27.7	33.6		18.2	120.4	5.0	744.0	0.34	0.26
6	9	74.4	51.4	63.1	58.5	47.4	0.03	18.0	114.8	4.8	601.1	0.25	0.19
6	10	69.9	52.6	59.2	84.7	54.2	0.06	17.1	102.2	4.3	419.4	0.18	0.14
6	11	73.8	42.7	58.4	74.8	49.9	0.06	20.5	120.4	5.0	646.2	0.24	0.18
6	12	71.6	47.9	58.9	77.6	51.2	0.02	30.3	103.0	4.3	509.5	0.19	0.15
6	13	69.1	47.5	57.0	78.5	49.8		19.9	102.9	4.3	466.3	0.18	0.13
6	14	74.1	49.7	61.9	76.4	53.9		22.0	116.5	4.9	520.4	0.19	0.15
6	15	62.9	49.7	55.6	92.7	53.5	0.24	12.2	87.3	3.6	241.4	0.09	0.07
6	16	58.4	51.3	54.6	89.7	51.6	0.02	11.7	87.6	3.6	177.4	0.07	0.06
6	17	75.8	49.1	60.4	81.1	53.9	0.03	22.9	125.8	5.2	546.0	0.21	0.15
6	18	82.8	48.1	66.9	63.6	51.4		15.3	85.4	3.6	714.0	0.26	0.19
6	19	87.0	53.2	70.5	56.0	51.8		18.1	94.7	3.9	588.6	0.26	0.19
6	20	89.8	52.7	71.1	54.8	51.8		17.5	97.9	4.1	636.1	0.29	0.22
6	21	86.4	52.6	68.8	56.5	51.3	0.01	23.7	108.9	4.5	486.4	0.27	0.20
6	22	87.7	51.0	71.0	49.8	47.9	0.02	44.2	139.2	5.8	530.0	0.30	0.22
6	23	88.8	54.4	72.0	55.8	52.9		13.8	85.5	3.6	713.0	0.31	0.23

TABLE B11
NCWCD WEATHER STATION DATA
LONGMONT SOUTH
1999

Date		Temperature			Relative Humidity	Dew Point	Precipitation Total	Wind			Solar Radiation	ASCE Calculation	
Month	Day	Max. (°F)	Min. (°F)	Average (°F)	Average (%)	Average (°F)	(inch)	Max (mph)	Total (miles)	Average (mph)	Total (Langl)	ET_r Alfalfa (inch)	ET_o Grass (inch)
6	24	90.9	55.1	74.7	44.4	48.5		16.2	118.8	5.0	758.0	0.35	0.27
6	25	92.2	59.1	76.7	42.4	49.9		23.2	122.2	5.1	644.2	0.33	0.25
6	26	87.8	57.3	73.7	46.5	51.2		14.3	107.3	4.5	741.0	0.34	0.26
6	27	85.8	62.0	71.2	69.6	59.8		18.3	126.4	5.3	664.4	0.31	0.24
6	28	78.5	49.4	65.0	55.1	47.3		22.9	132.1	5.5	736.0	0.32	0.24
6	29	90.2	50.5	71.7	47.6	46.9		30.0	165.7	6.9	797.0	0.40	0.31
6	30	84.9	52.6	69.8	53.9	50.2		28.4	121.8	5.1	477.5	0.27	0.20
7	1	87.6	54.6	69.5	62.3	55.2		18.9	115.8	4.8	679.3	0.31	0.23
7	2	97.3	60.6	78.2	41.8	50.7		33.4	128.4	5.3	479.8	0.32	0.24
7	3	95.9	59.8	81.7	30.3	45.4		19.6	125.1	5.2	641.2	0.34	0.25
7	4	95.8	59.6	81.9	31.8	46.9		20.2	114.1	4.8	632.4	0.33	0.25
7	5	83.5	60.4	73.6	51.9	55.0		18.3	125.9	5.2	730.0	0.33	0.26
7	6	86.3	60.7	72.6	75.6	64.3		15.1	87.0	3.6	571.0	0.25	0.20
7	7	97.1	57.8	77.2	53.6	56.2		20.4	92.7	3.9	738.0	0.36	0.27
7	8	88.9	62.3	74.1	59.6	58.6		20.3	121.4	5.1	365.4	0.24	0.18
7	9	79.9	57.0	69.5	56.1	52.2		21.6	106.4	4.4	721.0	0.30	0.23
7	10	81.8	53.4	67.2	60.8	52.7		15.1	131.5	5.5	707.0	0.32	0.24
7	11	83.7	53.1	67.8	62.6	53.6		25.3	111.6	4.7	529.7	0.26	0.19
7	12	86.4	51.1	70.3	56.0	50.8		15.6	82.7	3.4	737.0	0.30	0.23
7	13	95.4	53.9	78.1	39.2	46.6		17.8	94.3	3.9	714.0	0.33	0.24
7	14	87.3	64.8	75.6	48.4	54.2	0.01	31.3	108.4	4.5	367.2	0.23	0.17
7	15	85.0	57.7	72.0	59.3	55.9		18.0	99.3	4.1	409.9	0.23	0.17
7	16	73.4	61.1	66.1	79.3	59.4	0.15	18.9	131.0	5.5	390.5	0.19	0.15
7	17	82.1	60.0	69.3	84.1	63.7	0.02	22.1	83.7	3.5	516.6	0.21	0.16
7	18	85.7	57.7	71.2	69.6	58.8	0.01	20.7	87.4	3.6	427.1	0.21	0.16
7	19	85.7	60.6	69.6	76.8	61.0	0.19	32.7	114.8	4.8	528.7	0.25	0.19
7	20	85.3	58.0	72.5	67.3	58.5	0.01	14.5	79.2	3.3	701.0	0.27	0.21
7	21	91.9	57.0	74.3	57.7	55.6		23.2	96.3	4.0	649.6	0.30	0.23
7	22	88.1	59.2	72.3	61.7	56.8	0.01	27.2	134.1	5.6	433.5	0.26	0.20

TABLE B11
NCWCD WEATHER STATION DATA
LONGMONT SOUTH
1999

Date		Temperature			Relative Humidity	Dew Point	Precipitation Total	Wind			Solar Radiation	ASCE Calculation	
Month	Day	Max. (°F)	Min. (°F)	Average (°F)	Average (%)	Average (°F)	(inch)	Max (mph)	Total (miles)	Average (mph)	Total (Langl)	ET_r Alfalfa (inch)	ET_o Grass (inch)
7	23	93.5	57.8	77.3	47.4	51.2		15.4	85.5	3.6	697.4	0.31	0.24
7	24	93.0	58.5	73.6	58.2	56.0	0.01	28.7	112.5	4.7	569.1	0.31	0.24
7	25	92.6	59.5	73.0	69.0	60.1	0.54	46.4	111.6	4.7	466.5	0.27	0.21
7	26	88.6	56.1	73.6	62.7	57.8		13.9	78.9	3.3	569.2	0.25	0.20
7	27	91.2	61.4	75.3	62.0	60.1	0.01	24.5	134.9	5.6	611.9	0.30	0.24
7	28	92.4	64.4	75.8	63.3	61.1		29.1	102.5	4.3	557.3	0.28	0.22
7	29	91.1	62.0	73.9	64.9	59.9	0.03	26.0	99.1	4.1	536.8	0.27	0.21
7	30	84.8	59.6	69.7	73.6	59.8	0.58	35.4	127.0	5.3	431.6	0.24	0.18
7	31	75.5	59.6	64.1	94.6	62.4	0.56	36.8	93.6	3.9	285.6	0.14	0.11
8	1	66.0	59.3	61.9	95.1	60.4		13.3	137.4	5.7	166.9	0.08	0.06
8	2	74.7	58.2	64.5	85.8	59.8		10.9	85.3	3.6	496.5	0.18	0.14
8	3	79.0	56.6	66.8	80.6	59.6		11.5	67.2	2.8	566.2	0.19	0.16
8	4	75.1	60.4	64.3	93.6	62.3	0.01	24.6	115.5	4.8	310.0	0.13	0.10
8	5	74.2	58.9	65.0	91.7	62.2	0.01	11.3	82.6	3.4	481.7	0.16	0.13
8	6	82.7	62.4	70.5	80.2	63.2		11.5	75.3	3.1	564.1	0.20	0.17
8	7	81.6	57.2	69.6	73.0	59.8		32.1	90.9	3.8	575.1	0.21	0.17
8	8	84.8	55.9	71.1	69.8	59.6		13.2	79.2	3.3	616.6	0.23	0.19
8	9	85.9	58.6	70.1	68.0	58.0		26.2	125.8	5.2	489.9	0.24	0.19
8	10	78.5	61.2	68.5	79.2	61.7		20.0	100.2	4.2	454.2	0.19	0.15
8	11	84.8	56.5	71.0	65.0	56.3		29.1	144.3	6.0	634.8	0.28	0.22
8	12	82.9	59.4	71.6	45.0	48.7		32.2	174.0	7.3	578.1	0.30	0.24
8	13	82.5	51.0	66.8	77.5	59.0		9.9	75.3	3.1	656.4	0.24	0.20
8	14	86.3	52.6	69.4	65.9	55.8	0.06	32.2	95.7	4.0	545.9	0.24	0.19
8	15	83.0	60.0	71.8	57.0	55.5		21.6	126.1	5.3	392.7	0.21	0.17
8	16	87.2	53.7	71.3	53.4	51.8		14.5	89.0	3.7	570.2	0.24	0.20
8	17	85.1	59.7	69.3	71.0	58.6	0.03	19.4	94.4	3.9	404.3	0.20	0.16
8	18	83.6	51.3	69.2	60.0	52.7		9.3	76.5	3.2	656.4	0.25	0.21
8	19	86.9	53.0	68.3	64.4	55.2		18.6	87.0	3.6	518.8	0.23	0.19
8	20	84.9	55.8	68.9	71.1	58.4	0.01	25.5	123.1	5.1	406.6	0.20	0.17

TABLE B11
NCWCD WEATHER STATION DATA
LONGMONT SOUTH
1999

Date		Temperature			Relative Humidity	Dew Point	Precipitation Total	Wind			Solar Radiation	ASCE Calculation	
Month	Day	Max. (°F)	Min. (°F)	Average (°F)	Average (%)	Average (°F)	(inch)	Max (mph)	Total (miles)	Average (mph)	Total (Langl)	ET_r Alfalfa (inch)	ET_o Grass (inch)
8	21	84.9	54.4	67.7	73.5	58.1	0.01	23.2	72.9	3.0	396.8	0.18	0.15
8	22	83.1	57.8	70.0	68.1	56.8		21.0	90.8	3.8	632.1	0.24	0.20
8	23	81.7	52.8	67.4	69.3	56.6		14.2	76.9	3.2	625.9	0.23	0.19
8	24	91.7	53.0	71.9	62.9	56.8		10.6	75.0	3.1	619.0	0.24	0.20
8	25	88.6	55.3	71.7	59.9	56.3		15.3	95.1	4.0	421.2	0.20	0.17
8	26	87.1	55.4	73.2	62.3	58.4		15.9	67.7	2.8	539.1	0.20	0.17
8	27	89.7	58.8	72.1	66.9	59.5	0.31	18.3	98.6	4.1	460.8	0.22	0.18
8	28	72.7	58.4	65.1	93.5	63.0	0.15	14.8	69.3	2.9	220.0	0.09	0.08
8	29	81.9	53.9	67.5	77.2	59.2		14.0	75.0	3.1	486.5	0.18	0.16
8	30	86.2	53.2	72.0	59.6	55.5		15.3	97.0	4.0	588.2	0.23	0.19
8	31	86.6	57.1	69.8	72.3	59.5	0.48	19.1	113.8	4.7	433.2	0.20	0.17
9	1	79.2	54.5	66.4	86.8	62.2		16.1	99.7	4.2	501.1	0.18	0.15
9	2	75.8	56.1	63.5	90.6	60.5	0.10	27.6	87.5	3.6	401.1	0.15	0.13
9	3	74.5	54.3	62.7	86.9	58.3	0.04	21.2	84.6	3.5	496.7	0.17	0.14
9	4	68.8	50.2	60.3	81.1	54.2		14.0	92.3	3.8	543.3	0.17	0.14
9	5	78.9	48.7	62.5	76.2	53.9		10.5	58.5	2.4	585.4	0.19	0.16
9	6	83.2	44.6	65.2	60.1	48.0		13.1	89.6	3.7	596.6	0.22	0.18
9	7	81.1	51.4	67.0	54.6	50.4		19.2	128.2	5.3	563.4	0.22	0.19
9	8	71.3	49.9	59.7	63.9	47.1		12.9	68.6	2.9	561.4	0.19	0.16
9	9	76.9	43.7	60.5	65.6	47.4		11.8	64.4	2.7	562.9	0.19	0.16
9	10	81.0	47.2	63.1	65.6	49.9	0.04	36.1	85.2	3.5	391.8	0.16	0.14
9	11	75.7	49.7	61.4	68.6	50.3		34.2	105.1	4.4	378.6	0.16	0.13
9	12	59.6	41.3	51.2	76.2	43.8		13.2	80.0	3.3	330.8	0.12	0.10
9	13	66.5	37.2	51.1	70.2	40.5		12.3	75.0	3.1	546.7	0.17	0.14
9	14	68.9	41.9	55.6	60.8	40.7		14.8	87.9	3.7	497.1	0.16	0.13
9	15	72.0	39.9	55.7	61.4	40.3		17.4	70.2	2.9	484.4	0.15	0.13
9	16	76.6	43.0	57.5	67.1	43.8		12.6	65.8	2.7	522.6	0.16	0.14
9	17	81.8	43.6	61.8	52.6	40.0		16.4	83.2	3.5	527.4	0.19	0.16
9	18	82.9	43.4	64.9	42.0	38.0		12.2	79.5	3.3	442.8	0.17	0.14

TABLE B11
NCWCD WEATHER STATION DATA
LONGMONT SOUTH
1999

Date		Temperature			Relative Humidity	Dew Point	Precipitation Total	Wind			Solar Radiation	ASCE Calculation	
Month	Day	Max. (°F)	Min. (°F)	Average (°F)	Average (%)	Average (°F)	(inch)	Max (mph)	Total (miles)	Average (mph)	Total (Langl)	ET_r Alfalfa (inch)	ET_o Grass (inch)
9	19	62.2	43.7	48.8	87.1	44.6	0.10	29.7	137.7	5.7	72.5	0.09	0.07
9	20	53.9	40.5	47.1	95.8	45.6	0.15	10.8	85.4	3.6	149.7	0.06	0.05
9	21	72.6	36.6	55.1	61.7	38.3		10.7	76.3	3.2	534.4	0.16	0.14
9	22	79.0	41.4	60.3	53.0	40.1		11.7	77.4	3.2	520.8	0.16	0.14
9	23	79.4	46.8	64.1	48.9	42.2		13.4	76.2	3.2	490.1	0.15	0.13
9	24	79.9	52.5	64.6	51.5	44.9		26.0	132.9	5.5	360.8	0.18	0.16
9	25	85.7	47.0	68.3	46.2	43.3	0.02	34.0	144.8	6.0	486.0	0.22	0.20
9	26	75.9	38.2	49.3	71.1	39.7		24.7	115.9	4.8	301.8	0.19	0.16
9	27	52.3	37.6	43.1	88.2	39.6	0.41	18.3	150.7	6.3	215.4	0.10	0.08
9	28	43.8	32.1	36.5	94.2	34.6	0.51	15.1	153.0	6.4	149.1	0.07	0.05
9	29	67.7	26.7	44.7	77.5	37.7		9.4	57.1	2.4	495.8	0.12	0.10
9	30	66.9	37.8	51.7	64.2	38.7	0.01	15.2	102.8	4.3	481.9	0.12	0.11
10	1	72.0	34.7	46.6	76.8	38.8	0.01	27.0	131.8	5.5	450.7	0.16	0.14
10	2	51.1	34.3	39.9	87.7	36.5		15.5	87.4	3.6	275.4	0.08	0.07
10	3	51.1	33.2	40.6	82.5	35.5		21.0	93.9	3.9	202.7	0.07	0.06
10	4	74.8	28.6	49.0	69.8	37.5		9.1	61.3	2.6	452.8	0.12	0.10
10	5	74.9	36.0	54.5	50.9	35.4		11.0	86.9	3.6	455.7	0.13	0.12
10	6	80.0	41.8	59.5	60.1	44.3	0.01	28.4	105.6	4.4	337.3	0.12	0.11
10	7	60.3	44.3	52.2	85.8	48.0	0.05	15.2	85.3	3.6	114.7	0.05	0.04
10	8	66.9	35.8	51.6	68.4	39.7	0.01	14.6	85.2	3.5	437.6	0.13	0.11
10	9	83.6	36.9	57.7	60.1	40.8		12.4	67.5	2.8	448.6	0.15	0.13
10	10	69.5	39.5	54.5	69.2	44.4		10.9	77.3	3.2	434.6	0.12	0.10
10	11	82.7	38.5	59.6	56.1	39.5		17.2	85.1	3.5	444.0	0.15	0.14
10	12	81.3	48.5	63.5	33.5	33.0	0.01	21.5	110.6	4.6	324.8	0.15	0.14
10	13	69.6	38.9	54.5	62.6	41.3		11.5	90.5	3.8	412.6	0.13	0.12
10	14	83.5	36.8	60.2	43.1	31.1	0.01	24.5	133.1	5.5	471.6	0.22	0.20
10	15	59.1	36.8	45.0	70.2	35.2	0.04	16.1	105.3	4.4	119.5	0.09	0.08
10	16	39.7	23.4	32.0	102.1	32.2	0.22	20.8	158.8	6.6	97.6	0.05	0.03
10	17	52.2	16.3	33.3	79.1	25.8	0.15	12.9	80.0	3.3	415.4	0.10	0.08

TABLE B11
NCWCD WEATHER STATION DATA
LONGMONT SOUTH
1999

Date		Temperature			Relative Humidity	Dew Point	Precipitation Total	Wind			Solar Radiation	ASCE Calculation	
Month	Day	Max. (°F)	Min. (°F)	Average (°F)	Average (%)	Average (°F)	(inch)	Max (mph)	Total (miles)	Average (mph)	Total (Langl)	ET_r Alfalfa (inch)	ET_o Grass (inch)
10	18	41.0	32.6	37.7	92.1	35.5	0.13	13.5	116.2	4.8	100.0	0.02	0.02
10	19	55.2	29.4	41.2	74.2	32.3		15.3	87.0	3.6	380.7	0.07	0.06
10	20	69.2	28.4	46.1	66.5	33.8		7.5	57.0	2.4	395.9	0.08	0.08
10	21	71.3	33.2	51.6	48.9	31.1		12.0	70.8	3.0	393.6	0.09	0.09
10	22	70.7	33.9	51.1	51.6	31.4	0.01	9.8	71.0	3.0	384.7	0.10	0.09
10	23	71.7	31.4	50.1	57.4	33.4		8.3	60.6	2.5	382.2	0.10	0.09
10	24	77.2	31.2	52.7	49.2	31.5		8.9	62.3	2.6	388.9	0.12	0.11
10	25	74.2	35.8	52.7	41.8	28.0		11.0	69.6	2.9	371.3	0.11	0.11
10	26	81.5	32.7	53.7	46.8	30.0		12.9	81.3	3.4	370.0	0.14	0.13
10	27	74.6	33.1	50.8	49.5	29.6	0.02	31.0	114.9	4.8	350.2	0.14	0.14
10	28	59.8	27.7	43.0	74.2	34.9		29.0	66.0	2.8	290.6	0.08	0.07
10	29	58.2	36.9	48.2	49.1	29.6		26.8	202.1	8.4	284.2	0.12	0.11
10	30	64.6	23.8	43.5	53.3	25.1		8.1	61.4	2.6	350.6	0.09	0.08
10	31	72.7	30.4	49.8	52.3	31.2		9.8	62.0	2.6	350.5	0.09	0.08
11	1	53.8	23.9	39.8	44.3	19.9		16.8	112.3	4.7	338.2		
11	2	61.1	16.1	38.9	51.6	20.0		23.9	80.8	3.4	328.6		
11	3	66.4	29.5	46.1	40.8	20.7		12.9	76.7	3.2	276.1		
11	4	72.7	27.6	50.1	39.8	24.2		13.7	79.8	3.3	183.4		
11	5	61.8	31.5	43.8	53.7	27.0		10.4	74.5	3.1	319.4		
11	6	74.3	26.0	49.3	47.0	24.4		15.2	87.0	3.6	324.5		
11	7	72.8	32.3	51.1	37.8	24.4		9.7	66.8	2.8	316.7		
11	8	76.5	34.5	55.9	33.6	24.9		12.4	86.0	3.6	283.1		
11	9	69.4	39.4	54.5	35.6	27.0		14.0	94.9	4.0	294.2		
11	10	64.5	30.9	47.2	46.0	26.4		11.6	64.0	2.7	231.8		
11	11	68.4	35.9	48.5	46.2	26.8		12.6	71.2	3.0	187.9		
11	12	71.7	28.5	49.5	37.8	21.5		8.0	65.0	2.7	303.8		
11	13	75.5	28.1	51.0	31.0	18.8		12.8	79.2	3.3	304.9		
11	14	73.0	30.1	51.5	31.1	19.8		8.5	63.8	2.7	297.0		
11	15	75.1	31.3	49.9	37.7	21.9		8.4	61.1	2.5	296.6		

TABLE B11
NCWCD WEATHER STATION DATA
LONGMONT SOUTH
1999

Date		Temperature			Relative Humidity	Dew Point	Precipitation Total	Wind			Solar Radiation	ASCE Calculation	
Month	Day	Max. (°F)	Min. (°F)	Average (°F)	Average (%)	Average (°F)	(inch)	Max (mph)	Total (miles)	Average (mph)	Total (Langl)	ET_r Alfalfa (inch)	ET_o Grass (inch)
11	16	73.8	29.9	50.6	33.7	20.0		11.4	73.4	3.1	285.0		
11	17	77.6	30.2	51.6	42.0	27.7		33.3	82.1	3.4	258.2		
11	18	56.7	27.0	47.1	35.4	20.9	0.01	40.5	329.1	13.7	283.9		
11	19	57.3	21.3	37.5	52.0	20.2		9.7	74.4	3.1	266.1		
11	20	66.6	29.5	46.8	45.5	24.9		29.0	190.9	8.0	225.8		
11	21	50.5	30.2	40.3	54.8	23.6		23.7	149.9	6.2	214.8		
11	22	32.3	19.9	28.4	102.4	28.6	0.07	14.4	110.9	4.6	100.8		
11	23	32.1	7.9	19.3	98.2	19.5	0.24	6.6	50.3	2.1	252.3		
11	24	31.8	3.4	15.5	93.8	15.0	0.24	8.4	56.9	2.4	276.1		
11	25	53.5	12.0	32.9	67.4	23.0	0.07	42.7	181.0	7.5	194.1		
11	26	66.5	43.1	52.7	45.7	31.9		38.9	179.5	7.5	239.7		
11	27	52.5	30.4	41.1	78.2	34.5		18.6	84.9	3.5	254.1		
11	28	57.1	28.4	40.9	83.4	35.9		12.9	81.9	3.4	240.9		
11	29	52.6	24.1	35.0	95.8	33.9		9.6	70.9	3.0	246.5		
11	30	61.3	26.6	42.1	78.1	33.7		23.2	109.7	4.6	103.3		
12	1	57.5	36.6	47.6	41.6	25.2		15.2	134.8	5.6	194.3		
12	2	51.7	30.5	39.5	66.0	28.3		16.5	119.8	5.0	237.0		
12	3	36.9	30.3	33.6	87.2	30.0	0.24	29.1	258.5	10.8	110.0		
12	4	46.1	17.4	28.9	74.4	21.1		13.9	79.9	3.3	242.6		
12	5	48.3	13.8	28.0	77.0	21.6		9.1	60.9	2.5	257.2		
12	6	51.6	26.2	40.0	47.6	20.2		28.9	161.2	6.7	199.8		
12	7	51.1	25.4	39.4	52.0	22.8		28.3	158.4	6.6	172.8		
12	8	32.3	16.0	26.1	90.2	23.7	0.03	13.1	107.0	4.5	146.7		
12	9	38.7	9.5	23.7	78.5	17.8		6.6	59.2	2.5	224.0		
12	10	46.0	18.2	29.8	68.3	19.4		9.4	59.2	2.5	231.0		
12	11	40.7	21.4	29.1	76.0	22.1		16.3	107.6	4.5	232.4		
12	12	45.1	21.3	32.7	58.0	18.2	0.01	16.3	118.0	4.9	245.5		
12	13	51.3	23.0	33.6	69.6	23.8	0.03	35.5	136.2	5.7	107.4		
12	14	36.7	22.5	29.7	36.8	5.8		36.8	342.7	14.3	244.6		

TABLE B11
NCWCD WEATHER STATION DATA
LONGMONT SOUTH
1999

Date		Temperature			Relative Humidity	Dew Point	Precipitation Total	Wind			Solar Radiation	ASCE Calculation	
Month	Day	Max. (°F)	Min. (°F)	Average (°F)	Average (%)	Average (°F)	(inch)	Max (mph)	Total (miles)	Average (mph)	Total (Langl)	ET_r Alfalfa (inch)	ET_o Grass (inch)
12	15	45.6	27.1	36.1	34.7	10.9		30.2	330.0	13.8	197.4		
12	16	55.1	28.1	45.8	37.9	21.2	0.01	36.0	384.5	16.0	233.3		
12	17	47.6	22.9	37.0	64.1	25.4		26.4	122.5	5.1	171.2		
12	18	54.8	17.7	33.6	67.4	22.3	0.01	36.0	195.2	8.1	168.9		
12	19	37.5	14.9	25.8	62.2	14.1		24.6	124.5	5.2	158.2		
12	20	35.9	15.9	25.3	69.8	15.9		17.2	98.1	4.1	109.2		
12	21	35.9	19.4	29.3	68.9	19.9		21.3	119.1	5.0	92.3		
12	22	43.6	15.1	31.4	58.0	16.8	0.01	20.2	130.1	5.4	93.0		
12	23	55.4	25.7	39.0	52.8	21.8		12.6	91.2	3.8	234.1		
12	24	59.5	23.0	39.4	52.4	21.8		10.1	75.1	3.1	229.3		
12	25	59.3	24.5	39.3	48.6	19.5		10.4	72.2	3.0	237.2		
12	26	52.9	24.2	36.1	53.1	19.0		12.2	90.0	3.8	237.5		
12	27	51.7	20.5	37.0	56.0	21.6		15.1	102.8	4.3	226.6		
12	28	65.3	25.5	42.7	46.5	20.6		16.8	103.5	4.3	239.9		
12	29	63.3	22.2	41.5	42.2	18.3		13.1	79.8	3.3	230.6		
12	30	58.2	21.0	37.0	49.2	17.3		10.3	76.1	3.2	240.7		
12	31	58.5	20.3	35.9	55.0	19.8		14.1	83.3	3.5	217.1		
							13.96						**36.82**

TABLE B12
NCWCD WEATHER STATION DATA
LONGMONT SOUTH
1998

Date		Temperature			Relative Humidity	Dew Point	Precipitation Total	Wind			Solar Radiation	ASCE Calculation	
Month	Day	Max. (°F)	Min. (°F)	Average (°F)	Average (%)	Average (°F)	(inch)	Max (mph)	Total (miles)	Average (mph)	Total (Langl)	ET_r Alfalfa (inch)	ET_o Grass (inch)
1	1	67.4	32.5	49.9	34.4	21.0		26.7	117.8	4.9	237.6		
1	2	65.7	32.1	53.3	32.0	22.3		38.8	227.5	9.5	222.7		
1	3	51.1	22.9	30.9	81.6	25.0		14.0	93.2	3.9	55.8		
1	4	45.3	22.1	29.3	89.5	26.4		7.5	58.2	2.4	196.9		
1	5	47.1	19.9	33.4	78.0	26.9		22.7	115.4	4.8	221.4		
1	6	36.3	10.5	25.3	89.5	22.8	0.07	21.7	102.9	4.3	249.6		
1	7	42.6	6.8	20.5	74.9	13.2		9.6	60.1	2.5	256.3		
1	8	48.2	11.4	29.2	60.5	16.0	0.02	33.0	139.8	5.8	251.4		
1	9	29.5	4.6	15.1	90.0	12.6		15.3	102.6	4.3	114.3		
1	10	19.9	3.2	13.0	90.4	11.1		8.5	56.4	2.4	102.1		
1	11	49.9	13.4	29.3	71.5	19.9		28.3	116.7	4.9	186.5		
1	12	21.7	13.1	17.9	97.3	17.3		19.1	104.0	4.3	69.5		
1	13	37.4	18.0	25.2	90.7	22.6		22.6	89.8	3.7	112.5		
1	14	46.1	22.5	34.2	44.4	13.7		21.2	133.8	5.6	265.6		
1	15	49.6	19.6	34.6	55.5	20.6		26.2	113.6	4.7	157.9		
1	16	45.7	22.5	36.1	45.4	16.1		24.0	133.5	5.6	238.9		
1	17	51.8	34.2	42.4	47.2	23.6	0.01	41.7	193.7	8.1	135.0		
1	18	50.4	25.4	37.0	49.4	18.7		17.9	114.0	4.8	269.1		
1	19	48.7	19.6	32.4	67.9	22.2		22.8	83.4	3.5	254.3		
1	20	47.1	22.7	35.4	42.6	12.9		27.9	255.9	10.7	260.4		
1	21	36.0	13.9	24.8	70.5	16.3		18.6	75.7	3.2	213.3		
1	22	35.3	14.1	26.1	50.7	10.2		19.4	91.7	3.8	119.4		
1	23	44.2	18.3	30.0	52.8	13.6		16.1	122.9	5.1	281.9		
1	24	53.6	17.8	36.1	52.6	18.6		32.7	177.4	7.4	96.3		
1	25	52.2	26.0	39.9	38.7	16.0		25.3	150.5	6.3	227.8		
1	26	56.8	19.3	36.6	44.0	15.1		21.1	98.3	4.1	260.9		
1	27	56.9	22.5	40.7	41.7	16.7		29.4	123.8	5.2	279.6		
1	28	56.5	21.4	41.4	43.3	18.5		28.4	182.3	7.6	239.3		
1	29	59.2	18.3	35.4	58.4	18.8		13.7	77.4	3.2	302.0		

TABLE B12
NCWCD WEATHER STATION DATA
LONGMONT SOUTH
1998

Date		Temperature			Relative Humidity	Dew Point	Precipitation Total	Wind			Solar Radiation	ASCE Calculation	
Month	Day	Max. (°F)	Min. (°F)	Average (°F)	Average (%)	Average (°F)	(inch)	Max (mph)	Total (miles)	Average (mph)	Total (Langl)	ET_r Alfalfa (inch)	ET_o Grass (inch)
1	30	56.6	21.8	39.2	44.5	16.5		14.5	99.6	4.2	278.0		
1	31	39.9	26.9	33.9	80.2	28.5		13.1	105.2	4.4	130.1		
2	1	47.0	16.4	32.2	66.2	20.5		9.7	76.7	3.2	273.8		
2	2	50.0	16.6	31.7	60.2	18.3		12.3	81.2	3.4	204.7		
2	3	44.6	18.6	31.3	74.3	23.8		13.1	58.6	2.4	279.8		
2	4	32.3	18.6	27.0	93.9	25.7		12.3	77.9	3.2	116.5		
2	5	38.1	30.0	33.1	92.6	31.1		8.3	50.1	2.1	94.5		
2	6	50.8	24.2	36.3	79.0	29.9		11.6	63.9	2.7	287.8		
2	7	43.9	19.9	32.7	79.4	26.6		8.3	61.3	2.6	153.2		
2	8	53.0	22.6	37.4	59.8	22.9		13.4	78.0	3.3	236.4		
2	9	46.1	27.7	38.0	68.6	28.4		12.2	83.3	3.5	162.0		
2	10	47.9	22.6	34.3	55.2	17.9		14.4	90.2	3.8	293.6		
2	11	48.3	16.3	32.3	44.6	10.2		15.0	101.1	4.2	317.0		
2	12	48.2	16.1	31.7	48.7	12.6		13.8	73.6	3.1	346.3		
2	13	56.0	16.3	35.8	49.3	16.6		15.8	87.1	3.6	327.5		
2	14	53.7	24.0	38.8	51.8	21.2		16.9	101.7	4.2	332.2		
2	15	43.1	22.2	33.1	79.9	27.5		13.4	83.2	3.5	213.0		
2	16	35.9	32.2	33.3	100.7	33.2	0.12	11.3	108.1	4.5	133.8		
2	17	45.8	28.0	37.0	81.2	31.2	0.01	12.4	72.1	3.0	284.7		
2	18	47.9	25.9	36.6	71.4	27.6	0.02	20.0	83.0	3.5	303.1		
2	19	47.3	20.6	33.5	61.8	20.0		15.6	84.2	3.5	378.8		
2	20	46.1	17.1	31.5	57.0	16.5		12.7	62.1	2.6	316.6		
2	21	56.0	18.1	36.4	51.6	18.0	0.01	26.9	109.5	4.6	345.2		
2	22	59.4	27.1	43.4	47.7	22.1		29.5	159.7	6.7	378.9		
2	23	56.5	24.3	41.0	66.7	29.0		22.1	113.0	4.7	373.5		
2	24	64.4	24.4	44.0	55.0	26.8	0.03	29.5	139.9	5.8	362.7		
2	25	46.8	29.3	40.7	29.7	11.7	0.03	40.4	379.3	15.8	117.2		
2	26	40.7	20.6	30.9	28.3	0.9		35.4	221.0	9.2	392.4		
2	27	37.3	13.2	26.3	32.3	-1.1		24.7	164.7	6.9	336.9		

TABLE B12
NCWCD WEATHER STATION DATA
LONGMONT SOUTH
1998

Date		Temperature			Relative Humidity	Dew Point	Precipitation Total	Wind			Solar Radiation	ASCE Calculation	
Month	Day	Max. (°F)	Min. (°F)	Average (°F)	Average (%)	Average (°F)	(inch)	Max (mph)	Total (miles)	Average (mph)	Total (Langl)	ET_r Alfalfa (inch)	ET_o Grass (inch)
2	28	40.9	11.5	26.3	30.2	-2.4		28.4	199.3	8.3	424.2		
3	1	44.3	12.6	28.7	34.6	1.8		31.5	146.5	6.1	431.1	0.09	0.09
3	2	45.3	10.4	29.1	52.3	12.2		17.4	84.8	3.5	416.9	0.07	0.07
3	3	58.3	16.5	37.1	47.8	16.8		22.9	110.7	4.6	418.1	0.09	0.09
3	4	41.8	26.4	32.4	73.6	24.5		17.6	145.8	6.1	316.8	0.06	0.06
3	5	44.7	13.9	30.9	70.7	21.2		15.3	105.1	4.4	379.8	0.07	0.06
3	6	38.9	16.3	27.8	79.1	22.2	0.01	21.7	173.8	7.2	348.0	0.07	0.05
3	7	24.8	8.9	17.8	87.9	15.1		22.9	232.5	9.7	351.2	0.05	0.03
3	8	30.3	-0.6	18.0	74.3	11.2	0.07	13.2	101.9	4.2	451.8	0.06	0.05
3	9	30.6	11.8	20.2	81.4	15.3	0.01	13.2	71.1	3.0	412.8	0.05	0.04
3	10	49.3	12.1	29.6	68.0	18.4	0.03	30.0	154.9	6.5	359.1	0.07	0.07
3	11	29.2	8.1	17.9	79.7	13.0		13.9	111.4	4.6	353.5	0.05	0.04
3	12	56.1	16.3	36.1	61.2	21.5		15.7	76.2	3.2	489.2	0.08	0.08
3	13	63.3	21.9	43.3	49.2	22.9		14.1	81.0	3.4	492.4	0.09	0.09
3	14	59.1	23.0	39.3	67.3	27.8		10.3	76.6	3.2	423.9	0.09	0.08
3	15	60.8	27.1	45.0	54.0	27.2		19.8	99.0	4.1	481.7	0.11	0.11
3	16	50.2	31.3	40.0	81.9	34.8		12.9	91.4	3.8	273.8	0.07	0.06
3	17	57.2	30.0	42.5	82.4	36.7	0.03	22.8	126.1	5.3	325.6	0.08	0.08
3	18	37.6	26.5	32.2	100.3	32.2	0.64	23.5	186.4	7.8	134.2	0.04	0.02
3	19	38.4	10.8	26.5	92.4	24.9	0.30	11.5	76.1	3.2	468.2	0.08	0.06
3	20	44.4	18.7	29.6	86.2	25.8		8.0	64.6	2.7	529.4	0.09	0.08
3	21	53.2	23.3	38.7	64.7	26.3		13.4	87.2	3.6	526.7	0.10	0.09
3	22	66.7	41.5	56.2	41.5	33.0	0.03	29.2	191.3	8.0	450.0	0.12	0.13
3	23	71.1	44.4	57.2	48.6	37.2		27.5	126.2	5.3	338.8	0.11	0.11
3	24	77.8	40.0	58.3	47.0	34.3		22.4	144.5	6.0	535.9	0.19	0.19
3	25	77.9	38.3	59.4	37.6	28.9		24.7	158.5	6.6	540.3	0.21	0.21
3	26	74.2	44.8	56.3	43.8	33.5	0.01	31.4	196.3	8.2	418.3	0.21	0.21
3	27	67.7	44.5	54.0	56.4	36.7		31.4	145.6	6.1	525.0	0.18	0.17
3	28	63.8	35.8	49.7	65.8	36.8	0.01	22.6	124.2	5.2	461.5	0.15	0.13

TABLE B12
NCWCD WEATHER STATION DATA
LONGMONT SOUTH
1998

Date		Temperature			Relative Humidity	Dew Point	Precipitation Total	Wind			Solar Radiation	ASCE Calculation	
Month	Day	Max. (°F)	Min. (°F)	Average (°F)	Average (%)	Average (°F)	(inch)	Max (mph)	Total (miles)	Average (mph)	Total (Langl)	ET_r Alfalfa (inch)	ET_o Grass (inch)
3	29	52.6	30.6	40.6	86.3	36.5	0.07	25.6	206.3	8.6	287.1	0.11	0.08
3	30	38.3	26.7	30.3	91.1	27.8	0.12	23.2	144.9	6.0	297.3	0.08	0.06
3	31	50.8	18.5	34.5	76.9	26.8	0.15	20.5	120.6	5.0	579.8	0.13	0.10
4	1	63.7	26.1	45.8	48.5	24.2	0.01	21.1	132.7	5.5	557.8	0.15	0.14
4	2	44.6	32.5	35.8	88.2	32.2	0.51	23.4	248.1	10.3	79.2	0.05	0.04
4	3	51.2	30.0	41.1	80.1	34.9	0.03	11.5	81.5	3.4	567.2	0.11	0.10
4	4	63.0	32.0	45.8	70.2	36.1	0.01	16.7	98.2	4.1	498.9	0.13	0.11
4	5	64.4	34.6	49.4	45.7	27.2	0.02	30.9	163.4	6.8	607.6	0.18	0.17
4	6	51.3	34.0	43.1	71.1	33.7		24.3	97.8	4.1	207.1	0.07	0.06
4	7	51.3	29.0	38.3	86.5	34.0	0.22	25.5	129.5	5.4	364.2	0.10	0.08
4	8	53.2	31.1	40.9	79.2	34.1	0.04	32.2	107.7	4.5	456.4	0.11	0.10
4	9	59.7	29.3	44.2	62.7	29.6		20.2	112.2	4.7	564.8	0.15	0.13
4	10	64.2	30.3	47.9	50.4	26.8		16.0	104.0	4.3	587.5	0.16	0.14
4	11	81.3	29.4	56.4	40.2	26.6		33.0	164.7	6.9	613.0	0.24	0.23
4	12	68.2	46.2	56.6	30.5	24.9	0.02	47.1	250.6	10.4	528.4	0.24	0.22
4	13	58.0	35.5	46.6	59.9	32.1	0.07	28.4	158.6	6.6	400.8	0.15	0.13
4	14	45.8	34.1	38.8	93.9	37.0	0.57	14.2	86.2	3.6	180.8	0.07	0.06
4	15	43.2	33.9	36.7	93.4	34.9	0.25	20.0	126.3	5.3	194.9	0.07	0.05
4	16	39.3	30.5	34.1	84.1	29.7	0.02	12.1	112.1	4.7	202.3	0.06	0.05
4	17	51.3	26.6	38.3	77.3	31.4	0.02	20.8	101.9	4.2	547.0	0.12	0.10
4	18	47.2	31.0	37.8	80.5	31.5	0.31	16.4	121.2	5.0	626.9	0.13	0.10
4	19	58.7	30.1	44.5	59.1	29.3	0.02	25.4	123.5	5.1	509.5	0.14	0.12
4	20	51.5	33.8	41.7	84.8	37.2	0.07	18.0	135.1	5.6	407.1	0.10	0.08
4	21	60.6	32.6	46.6	64.8	33.2		11.1	69.2	2.9	603.1	0.15	0.12
4	22	69.3	31.2	51.1	53.0	31.2		12.1	73.0	3.0	659.8	0.18	0.16
4	23	78.4	33.8	58.1	44.3	32.5	0.01	15.5	87.6	3.6	630.8	0.20	0.17
4	24	78.7	41.8	61.1	38.3	31.1	0.03	32.7	187.3	7.8	578.9	0.25	0.23
4	25	65.7	43.9	54.5	54.5	36.8		21.9	170.7	7.1	564.2	0.21	0.18
4	26	56.5	37.7	46.0	69.7	35.8	0.22	23.8	169.2	7.0	435.3	0.17	0.13

TABLE B12
NCWCD WEATHER STATION DATA
LONGMONT SOUTH
1998

Date		Temperature			Relative Humidity	Dew Point	Precipitation Total	Wind			Solar Radiation	ASCE Calculation	
Month	Day	Max. (°F)	Min. (°F)	Average (°F)	Average (%)	Average (°F)	(inch)	Max (mph)	Total (miles)	Average (mph)	Total (Langl)	ET_r Alfalfa (inch)	ET_o Grass (inch)
4	27	60.1	32.2	46.9	63.4	33.4	0.01	21.3	140.6	5.9	634.2	0.20	0.16
4	28	61.8	37.3	49.0	58.9	33.0		21.2	99.4	4.1	667.2	0.19	0.16
4	29	68.9	28.8	51.4	45.4	28.1		15.1	73.9	3.1	681.2	0.20	0.17
4	30	73.5	36.7	57.1	43.1	31.7	0.02	45.6	182.2	7.6	494.6	0.21	0.19
5	1	69.8	40.3	55.0	51.0	36.3		30.9	114.2	4.8	482.6	0.18	0.15
5	2	67.6	37.8	53.4	60.6	38.7		17.2	78.9	3.3	621.1	0.19	0.16
5	3	79.2	37.9	57.9	51.5	38.0		25.1	127.4	5.3	634.3	0.25	0.21
5	4	76.7	39.5	59.7	51.4	38.5	0.01	28.9	189.6	7.9	597.4	0.25	0.22
5	5	68.6	44.4	55.2	72.6	45.4	0.15	24.3	130.9	5.5	568.5	0.20	0.16
5	6	64.6	40.0	50.8	78.7	44.0	0.13	27.5	163.3	6.8	331.7	0.15	0.12
5	7	68.2	46.0	53.3	71.2	43.5	0.04	23.2	163.7	6.8	601.1	0.22	0.18
5	8	58.5	41.5	48.4	86.5	44.3	0.16	30.5	168.2	7.0	338.6	0.12	0.09
5	9	63.6	33.9	49.5	79.8	42.8	0.01	16.3	98.8	4.1	561.7	0.16	0.13
5	10	76.8	39.7	58.6	66.0	45.1	0.01	18.7	116.8	4.9	647.9	0.22	0.18
5	11	70.8	46.8	57.8	67.5	45.6	0.03	26.4	136.9	5.7	571.0	0.20	0.16
5	12	69.3	38.6	54.7	71.0	44.1	0.01	19.6	99.3	4.1	585.2	0.19	0.15
5	13	86.7	41.0	63.7	47.2	37.5	0.06	32.8	139.1	5.8	690.0	0.31	0.26
5	14	72.2	42.8	57.2	56.2	40.9	0.01	32.2	171.4	7.1	497.0	0.22	0.18
5	15	71.6	43.8	58.5	38.3	30.3		34.3	259.7	10.8	737.0	0.34	0.27
5	16	78.3	38.0	60.1	43.2	35.4		16.4	127.4	5.3	700.0	0.28	0.23
5	17	85.4	42.1	66.3	30.7	29.2		25.6	143.2	6.0	722.0	0.32	0.26
5	18	83.6	45.8	68.6	31.0	34.5	0.01	27.5	110.0	4.6	480.1	0.24	0.19
5	19	84.5	42.0	65.9	40.7	38.3		30.1	98.4	4.1	631.0	0.27	0.22
5	20	80.7	46.2	64.6	58.9	48.6		26.5	110.8	4.6	478.9	0.23	0.18
5	21	82.2	50.7	66.5	57.0	48.7		27.7	138.4	5.8	570.8	0.26	0.21
5	22	64.6	48.4	55.9	85.7	51.5	0.10	19.7	130.3	5.4	334.1	0.14	0.11
5	23	72.8	42.6	57.2	61.0	41.2	0.01	22.6	130.9	5.5	616.4	0.25	0.20
5	24	71.7	42.8	56.2	65.5	44.1		20.1	104.1	4.3	510.3	0.20	0.16
5	25	73.2	40.2	58.6	64.4	44.8		18.9	107.7	4.5	623.9	0.22	0.17

TABLE B12
NCWCD WEATHER STATION DATA
LONGMONT SOUTH
1998

Date		Temperature			Relative Humidity	Dew Point	Precipitation Total	Wind			Solar Radiation	ASCE Calculation	
Month	Day	Max. (°F)	Min. (°F)	Average (°F)	Average (%)	Average (°F)	(inch)	Max (mph)	Total (miles)	Average (mph)	Total (Langl)	ET_r Alfalfa (inch)	ET_o Grass (inch)
5	26	78.5	44.3	61.8	65.4	49.1	0.01	23.5	109.7	4.6	565.3	0.22	0.17
5	27	86.5	46.7	68.2	46.1	41.8		17.7	124.5	5.2	744.0	0.31	0.25
5	28	85.8	48.9	69.3	38.0	41.3		15.1	105.5	4.4	718.0	0.30	0.23
5	29	86.0	50.6	68.2	50.1	47.8		18.5	107.9	4.5	561.4	0.27	0.21
5	30	88.3	50.2	71.3	29.2	33.1		21.8	133.0	5.5	636.2	0.33	0.26
5	31	78.0	48.5	64.6	49.5	45.1		15.8	115.4	4.8	661.3	0.28	0.22
6	1	88.9	46.5	71.7	33.6	34.9	0.02	39.5	244.5	10.2	739.0	0.42	0.34
6	2	83.9	49.0	69.5	34.6	39.0		23.0	163.2	6.8	720.0	0.35	0.27
6	3	58.4	42.2	47.4	80.5	41.6		18.4	129.1	5.4	181.4	0.14	0.10
6	4	48.9	39.0	44.1	97.8	43.5	0.14	20.4	158.4	6.6	178.7	0.08	0.06
6	5	49.9	38.0	42.0	89.9	39.1	0.13	12.5	99.0	4.1	284.3	0.10	0.08
6	6	71.3	32.6	53.0	69.3	41.2		17.5	87.6	3.6	685.1	0.21	0.16
6	7	73.5	43.7	59.7	67.6	48.0	0.01	20.6	129.0	5.4	569.4	0.19	0.14
6	8	68.5	47.7	55.4	81.6	49.2	0.25	25.3	130.0	5.4	501.2	0.18	0.13
6	9	69.7	46.7	56.3	82.3	50.4	0.01	18.2	101.5	4.2	491.1	0.18	0.13
6	10	70.7	45.0	58.0	78.1	50.5	0.05	19.1	106.0	4.4	445.5	0.17	0.13
6	11	77.1	44.3	63.5	51.9	42.7	0.03	28.9	208.3	8.7	687.5	0.30	0.23
6	12	80.9	48.0	66.2	50.6	44.7		14.6	87.1	3.6	700.0	0.27	0.20
6	13	73.3	50.3	63.7	48.6	42.9	0.03	49.0	211.8	8.8	512.9	0.27	0.20
6	14	75.8	48.9	60.4	59.3	44.8	0.03	24.8	173.3	7.2	388.2	0.25	0.18
6	15	71.1	43.4	59.0	61.9	43.8	0.02	14.8	79.9	3.3	651.3	0.24	0.18
6	16	72.3	45.0	60.1	63.1	46.8	0.01	23.1	131.8	5.5	525.7	0.22	0.16
6	17	65.3	47.1	56.4	63.9	43.7	0.02	28.6	150.6	6.3	417.2	0.19	0.14
6	18	75.2	49.8	63.6	36.2	35.7		39.7	319.3	13.3	755.0	0.41	0.29
6	19	90.7	45.0	70.7	35.1	38.2		18.8	102.9	4.3	763.0	0.34	0.25
6	20	83.8	53.4	67.8	45.3	44.3		20.6	148.6	6.2	665.1	0.33	0.24
6	21	75.7	48.0	62.6	64.4	49.7		33.2	107.8	4.5	405.5	0.20	0.15
6	22	85.1	48.8	67.7	58.6	51.2	0.01	33.5	105.6	4.4	573.8	0.27	0.20
6	23	86.4	56.8	71.9	50.4	48.3		16.3	100.6	4.2	757.0	0.32	0.24

TABLE B12
NCWCD WEATHER STATION DATA
LONGMONT SOUTH
1998

Date		Temperature			Relative Humidity	Dew Point	Precipitation Total	Wind			Solar Radiation	ASCE Calculation	
Month	Day	Max. (°F)	Min. (°F)	Average (°F)	Average (%)	Average (°F)	(inch)	Max (mph)	Total (miles)	Average (mph)	Total (Langl)	ET_r Alfalfa (inch)	ET_o Grass (inch)
6	24	88.8	51.6	71.8	29.0	31.9		32.2	210.2	8.8	758.0	0.44	0.33
6	25	93.7	47.4	72.4	31.3	37.9		13.1	86.5	3.6	755.0	0.36	0.26
6	26	94.2	49.9	76.5	26.3	35.8	0.01	29.5	188.9	7.9	765.1	0.44	0.34
6	27	90.0	50.7	73.7	38.1	45.0		18.3	106.7	4.4	744.0	0.35	0.26
6	28	91.3	50.6	73.3	43.1	48.7		12.1	83.9	3.5	749.0	0.34	0.25
6	29	90.5	58.0	75.5	44.4	50.3		14.4	89.7	3.7	745.0	0.34	0.25
6	30	85.6	58.9	71.1	60.8	56.4		11.3	83.1	3.5	569.7	0.27	0.20
7	1	85.0	58.9	71.5	68.4	59.9		17.6	152.4	6.3	708.0	0.31	0.24
7	2	88.9	59.1	73.5	65.1	59.6		21.8	101.4	4.2	701.0	0.30	0.23
7	3	82.0	59.5	70.3	62.2	56.1		19.8	113.8	4.7	499.8	0.25	0.19
7	4	80.0	52.6	68.6	68.7	57.5		18.9	96.9	4.0	457.3	0.21	0.16
7	5	93.1	52.4	75.2	57.4	55.2		13.9	82.4	3.4	699.4	0.31	0.23
7	6	76.6	61.7	69.5	68.1	58.4	0.01	18.6	98.1	4.1	211.7	0.14	0.10
7	7	86.6	53.7	70.4	64.1	56.3		25.3	93.3	3.9	506.3	0.25	0.19
7	8	80.7	58.5	69.5	75.8	61.1		14.0	96.7	4.0	461.2	0.20	0.16
7	9	81.2	59.1	68.9	79.3	61.8		22.2	101.6	4.2	493.0	0.21	0.16
7	10	83.5	56.4	70.2	73.4	60.3		19.8	85.8	3.6	600.4	0.24	0.19
7	11	91.2	55.3	74.5	53.1	53.6	0.01	30.0	103.9	4.3	643.9	0.30	0.23
7	12	97.5	58.1	79.2	38.3	49.1		17.4	100.0	4.2	696.7	0.34	0.25
7	13	96.3	56.6	79.7	36.5	47.3		19.2	102.6	4.3	731.0	0.35	0.27
7	14	94.5	57.7	77.7	38.3	48.6		27.8	110.0	4.6	589.8	0.33	0.25
7	15	89.8	55.4	73.2	50.1	52.6		23.8	129.4	5.4	596.5	0.33	0.25
7	16	87.4	52.9	71.6	60.4	55.4		14.4	98.1	4.1	723.0	0.32	0.25
7	17	93.9	55.9	77.7	41.9	49.6		15.6	93.2	3.9	733.0	0.33	0.26
7	18	100.8	56.8	81.2	37.0	48.5		13.4	87.3	3.6	734.0	0.35	0.26
7	19	99.5	62.6	82.7	32.9	47.9		17.3	116.9	4.9	663.1	0.36	0.27
7	20	99.4	63.5	82.9	31.3	45.8		10.9	87.8	3.7	728.0	0.36	0.27
7	21	88.7	61.5	73.8	52.1	55.0		29.4	129.5	5.4	432.4	0.29	0.22
7	22	77.9	59.8	67.1	84.7	62.1	0.16	20.0	119.0	5.0	361.1	0.19	0.15

TABLE B12
NCWCD WEATHER STATION DATA
LONGMONT SOUTH
1998

Date		Temperature			Relative Humidity	Dew Point	Precipitation Total	Wind			Solar Radiation	ASCE Calculation	
Month	Day	Max. (°F)	Min. (°F)	Average (°F)	Average (%)	Average (°F)	(inch)	Max (mph)	Total (miles)	Average (mph)	Total (Langl)	ET_r Alfalfa (inch)	ET_o Grass (inch)
7	23	76.2	60.6	66.8	89.5	63.4	0.08	14.8	86.5	3.6	307.8	0.14	0.12
7	24	78.2	61.8	68.4	87.8	64.3	0.09	18.2	94.3	3.9	423.9	0.17	0.13
7	25	83.6	61.6	67.9	88.6	63.6	0.30	24.8	89.5	3.7	413.7	0.19	0.15
7	26	80.9	60.4	71.2	77.5	62.9	0.01	16.4	75.1	3.1	622.2	0.22	0.18
7	27	84.6	58.2	72.8	65.0	58.9		13.6	80.9	3.4	663.6	0.25	0.20
7	28	83.7	62.1	71.5	66.3	58.9		20.1	124.5	5.2	485.5	0.24	0.19
7	29	83.8	62.4	70.1	76.8	61.7	0.01	25.7	102.9	4.3	507.2	0.23	0.18
7	30	70.1	59.2	63.9	94.3	62.1	0.10	18.8	119.7	5.0	172.3	0.09	0.07
7	31	75.3	59.9	65.3	87.4	61.1	0.05	28.1	104.2	4.3	373.7	0.16	0.13
8	1	78.6	58.8	65.9	79.8	59.3	0.08	38.7	139.9	5.8	339.8	0.18	0.13
8	2	83.0	51.3	69.5	55.6	51.6		14.0	99.7	4.2	572.1	0.23	0.18
8	3	75.2	54.7	64.1	82.2	58.0	0.13	22.0	84.7	3.5	364.3	0.15	0.12
8	4	71.7	58.1	62.3	90.8	59.3	0.05	22.0	97.8	4.1	274.2	0.12	0.10
8	5	77.6	55.7	66.5	77.2	58.1	0.07	12.9	67.3	2.8	658.6	0.22	0.18
8	6	82.6	52.0	69.1	69.6	57.1		13.7	68.6	2.9	687.7	0.23	0.19
8	7	87.8	53.1	71.0	65.8	57.2		11.5	70.0	2.9	676.2	0.25	0.20
8	8	92.0	53.7	74.4	54.4	54.5	0.01	24.0	112.5	4.7	619.6	0.28	0.22
8	9	81.9	58.2	69.5	71.9	59.7		20.5	96.3	4.0	371.9	0.18	0.14
8	10	82.2	54.4	66.7	76.3	58.5	0.02	30.3	113.7	4.7	405.2	0.20	0.16
8	11	83.7	58.3	69.2	65.7	56.1		24.1	99.0	4.1	454.6	0.22	0.17
8	12	86.8	52.3	70.8	55.3	51.1		21.0	111.3	4.6	629.9	0.27	0.22
8	13	88.2	51.9	71.8	51.1	50.1		13.9	75.1	3.1	651.4	0.26	0.21
8	14	86.7	51.8	69.2	58.4	52.9		14.9	89.5	3.7	389.8	0.21	0.16
8	15	87.2	55.0	68.9	66.7	56.4	0.03	21.5	112.3	4.7	488.1	0.24	0.19
8	16	88.6	54.8	70.6	57.9	53.6	0.02	19.1	114.3	4.8	481.6	0.25	0.20
8	17	91.6	53.9	74.1	54.7	54.6	0.02	28.8	126.2	5.3	619.5	0.29	0.23
8	18	88.7	58.2	72.7	56.6	55.4		30.0	117.9	4.9	494.2	0.25	0.20
8	19	87.3	55.5	71.0	63.0	56.1		16.0	85.7	3.6	500.8	0.22	0.18
8	20	85.6	59.1	70.9	66.3	58.6		16.3	94.6	3.9	547.1	0.23	0.19

TABLE B12
NCWCD WEATHER STATION DATA
LONGMONT SOUTH
1998

Date		Temperature			Relative Humidity	Dew Point	Precipitation Total	Wind			Solar Radiation	ASCE Calculation	
Month	Day	Max. (°F)	Min. (°F)	Average (°F)	Average (%)	Average (°F)	(inch)	Max (mph)	Total (miles)	Average (mph)	Total (Langl)	ET_r Alfalfa (inch)	ET_o Grass (inch)
8	21	84.9	56.8	70.1	69.4	58.7		15.1	85.5	3.6	488.6	0.21	0.17
8	22	91.8	52.5	72.8	60.0	55.3	0.03	38.4	82.8	3.5	574.6	0.25	0.20
8	23	92.6	55.6	76.3	48.4	52.6		16.7	101.7	4.2	630.1	0.27	0.23
8	24	91.0	59.8	73.4	55.5	54.4		25.1	125.1	5.2	531.0	0.28	0.23
8	25	80.7	54.6	67.4	71.9	57.2		11.9	78.8	3.3	256.0	0.14	0.12
8	26	88.7	55.0	72.4	62.6	57.0		13.4	78.0	3.3	604.1	0.24	0.20
8	27	86.2	57.5	72.6	50.6	52.1		18.2	112.3	4.7	512.1	0.24	0.20
8	28	85.7	48.4	69.0	44.5	43.3		12.7	71.2	3.0	637.7	0.25	0.21
8	29	90.5	47.9	70.9	45.1	46.0		14.1	76.7	3.2	616.1	0.26	0.21
8	30	94.1	57.2	75.3	42.3	47.9	0.01	22.5	85.4	3.6	607.5	0.26	0.22
8	31	81.3	56.4	68.1	62.4	54.4	0.50	26.5	115.4	4.8	379.8	0.19	0.16
9	1	78.8	56.2	66.7	69.3	55.0	0.01	13.5	105.4	4.4	508.7	0.21	0.18
9	2	85.7	50.3	69.3	57.5	51.3	0.01	12.3	74.6	3.1	608.4	0.23	0.20
9	3	92.7	58.2	75.4	38.8	46.5		10.7	69.3	2.9	609.6	0.24	0.20
9	4	95.2	52.3	73.8	47.4	48.8		15.3	75.8	3.2	584.7	0.25	0.21
9	5	93.0	52.8	73.7	47.2	50.4		13.2	62.9	2.6	600.8	0.24	0.20
9	6	92.1	52.6	74.1	45.3	48.5		13.6	86.4	3.6	593.5	0.26	0.22
9	7	83.0	56.2	69.2	73.2	59.6		13.4	75.8	3.2	563.6	0.21	0.18
9	8	87.7	54.7	70.3	70.5	58.7	0.03	29.7	78.2	3.3	555.5	0.22	0.19
9	9	90.8	55.2	71.8	56.8	53.3		15.4	88.5	3.7	480.8	0.22	0.19
9	10	91.0	52.8	72.7	48.5	49.6		18.9	102.8	4.3	527.3	0.24	0.20
9	11	89.0	55.5	72.7	48.9	50.9		16.5	101.5	4.2	544.6	0.24	0.20
9	12	80.6	56.2	65.4	72.3	55.9	0.08	28.2	105.7	4.4	276.8	0.16	0.14
9	13	76.8	48.8	61.3	78.4	53.7	0.01	20.2	85.9	3.6	333.1	0.15	0.13
9	14	76.3	47.1	62.3	72.7	51.8		13.1	74.3	3.1	486.8	0.17	0.15
9	15	79.8	48.6	64.6	67.4	51.7		18.6	64.5	2.7	543.2	0.18	0.15
9	16	83.3	47.1	65.2	60.9	49.7		10.9	62.1	2.6	520.1	0.18	0.15
9	17	86.5	49.4	68.5	48.7	45.9		10.1	70.2	2.9	536.7	0.19	0.17
9	18	89.5	50.1	70.3	45.1	44.8		14.4	64.1	2.7	492.0	0.18	0.16

TABLE B12
NCWCD WEATHER STATION DATA
LONGMONT SOUTH
1998

Date		Temperature			Relative Humidity	Dew Point	Precipitation Total	Wind			Solar Radiation	ASCE Calculation	
Month	Day	Max. (°F)	Min. (°F)	Average (°F)	Average (%)	Average (°F)	(inch)	Max (mph)	Total (miles)	Average (mph)	Total (Langl)	ET_r Alfalfa (inch)	ET_o Grass (inch)
9	19	83.1	54.7	69.9	37.7	41.6	0.02	28.7	154.7	6.4	500.7	0.25	0.21
9	20	77.9	45.7	61.5	68.0	50.0	0.02	21.9	147.7	6.2	434.3	0.20	0.17
9	21	55.2	46.0	48.6	98.4	48.1	0.02	18.3	140.0	5.8	68.2	0.07	0.05
9	22	65.3	45.6	52.9	88.0	49.0	0.01	9.7	61.2	2.5	344.8	0.11	0.10
9	23	71.1	46.2	58.9	80.8	52.2		13.8	68.4	2.9	310.8	0.09	0.08
9	24	81.4	44.7	63.0	68.0	50.0	0.01	12.0	71.2	3.0	504.1	0.15	0.13
9	25	85.0	44.3	65.8	50.8	45.0	0.01	23.8	118.6	4.9	506.5	0.20	0.18
9	26	80.2	50.3	66.8	34.0	36.5	0.01	22.7	149.8	6.2	513.8	0.23	0.20
9	27	77.8	44.8	60.6	54.5	43.0		9.9	80.7	3.4	512.3	0.19	0.16
9	28	86.5	39.9	64.7	46.8	40.9		11.2	78.4	3.3	476.9	0.18	0.16
9	29	77.3	52.0	64.0	54.8	46.9		18.8	81.6	3.4	188.3	0.11	0.10
9	30	67.0	48.4	57.8	67.5	46.6		21.9	128.0	5.3	400.8	0.15	0.12
10	1	55.4	44.2	50.5	88.1	47.0	0.04	13.9	100.7	4.2	114.7	0.06	0.05
10	2	64.5	44.1	49.5	95.7	48.2	0.06	14.2	88.1	3.7	214.7	0.09	0.07
10	3	52.1	44.6	47.1	97.4	46.1	0.04	17.9	107.6	4.5	112.5	0.04	0.03
10	4	60.1	42.0	48.2	79.2	41.2	0.21	34.9	153.9	6.4	371.3	0.12	0.10
10	5	55.5	37.8	45.3	60.3	30.8		24.2	133.1	5.5	270.8	0.11	0.09
10	6	64.1	30.6	49.2	49.3	29.1		13.5	111.8	4.7	472.1	0.14	0.12
10	7	71.8	34.1	52.3	55.6	34.3		11.4	63.8	2.7	471.0	0.13	0.11
10	8	78.1	38.8	57.8	54.6	38.4		9.7	64.6	2.7	419.9	0.12	0.10
10	9	76.6	40.5	59.3	42.6	33.5		14.3	109.0	4.5	454.6	0.16	0.15
10	10	71.8	36.7	56.2	45.6	34.0		17.8	87.3	3.6	408.2	0.13	0.12
10	11	66.7	42.5	53.9	36.5	26.7		22.6	170.2	7.1	454.4	0.20	0.17
10	12	66.5	31.3	47.1	58.0	31.6		10.8	64.2	2.7	326.6	0.11	0.10
10	13	76.4	32.5	52.7	52.8	33.4		12.2	71.4	3.0	336.3	0.12	0.11
10	14	74.7	40.4	58.8	51.2	39.5		17.9	113.8	4.7	392.3	0.13	0.12
10	15	68.2	39.4	53.7	68.8	43.0		10.5	65.0	2.7	389.6	0.10	0.09
10	16	55.0	40.6	47.6	93.5	46.1	0.05	31.6	124.6	5.2	89.4	0.04	0.03
10	17	52.1	32.0	42.2	75.8	34.5		20.2	111.1	4.6	186.8	0.08	0.06

TABLE B12
NCWCD WEATHER STATION DATA
LONGMONT SOUTH
1998

Date		Temperature			Relative Humidity	Dew Point	Precipitation Total	Wind			Solar Radiation	ASCE Calculation	
Month	Day	Max. (°F)	Min. (°F)	Average (°F)	Average (%)	Average (°F)	(inch)	Max (mph)	Total (miles)	Average (mph)	Total (Langl)	ET_r Alfalfa (inch)	ET_o Grass (inch)
10	18	63.5	25.2	43.3	64.2	29.2		12.2	73.9	3.1	432.4	0.12	0.10
10	19	59.8	30.3	44.7	62.2	32.1		11.6	73.5	3.1	409.7	0.09	0.08
10	20	48.6	35.7	43.4	71.3	34.5		12.3	59.5	2.5	77.4	0.03	0.03
10	21	57.9	27.7	42.9	74.9	34.9		10.8	78.2	3.3	387.7	0.08	0.07
10	22	67.9	31.1	49.1	67.9	37.6		9.8	66.4	2.8	357.1	0.08	0.07
10	23	69.0	35.5	52.3	65.3	39.4	0.01	13.6	80.9	3.4	345.2	0.08	0.08
10	24	68.9	33.3	50.1	62.0	34.3	0.01	18.5	77.8	3.2	402.6	0.11	0.10
10	25	63.2	37.5	49.5	59.9	35.5		8.6	63.4	2.6	219.1	0.07	0.07
10	26	64.7	44.1	53.2	67.6	42.3		11.5	72.5	3.0	247.0	0.07	0.06
10	27	57.1	41.3	49.9	91.9	47.7	0.29	15.9	71.7	3.0	82.6	0.02	0.02
10	28	60.8	46.0	51.8	67.3	40.5	0.31	38.4	209.8	8.7	94.2	0.09	0.08
10	29	62.5	38.2	52.5	56.3	36.3		28.4	161.9	6.7	317.8	0.11	0.10
10	30	45.3	36.5	41.0	98.7	40.6	0.01	12.8	146.2	6.1	67.3	0.03	0.02
10	31	39.7	36.6	37.7	99.7	37.4	0.05	10.9	100.3	4.2	46.9	0.03	0.02
11	1	45.6	36.3	40.2	96.1	39.1	0.02	10.3	68.8	2.9	136.4		
11	2	40.9	34.2	37.1	100.1	37.0	0.12	12.1	100.6	4.2	67.0		
11	3	39.1	32.3	35.6	96.5	34.5	0.04	8.9	70.3	2.9	89.6		
11	4	44.8	32.4	37.4	88.2	34.0	0.01	10.8	76.1	3.2	179.1		
11	5	40.8	31.1	35.4	94.1	33.7		11.3	79.6	3.3	251.4		
11	6	52.1	35.7	41.1	82.3	35.2	0.02	16.3	116.6	4.9	321.4		
11	7	40.1	26.3	33.8	95.9	32.5	0.32	18.6	112.6	4.7	174.0		
11	8	37.2	24.8	32.0	97.4	31.2	0.01	11.8	67.8	2.8	126.9		
11	9	35.0	18.0	29.7	90.6	27.5	0.07	23.5	149.2	6.2	103.3		
11	10	42.1	20.6	32.9	44.0	12.3	0.06	34.5	284.6	11.9	381.5		
11	11	48.5	17.1	32.6	60.1	19.0		7.9	61.0	2.5	324.3		
11	12	54.2	22.9	36.1	69.3	25.8		16.4	82.0	3.4	329.6		
11	13	68.3	24.2	45.8	57.2	28.4		23.8	131.5	5.5	305.5		
11	14	68.9	33.9	51.1	50.7	31.7		25.7	128.2	5.3	268.8		
11	15	73.5	32.4	53.8	46.8	28.5		34.6	195.4	8.1	257.2		

TABLE B12
NCWCD WEATHER STATION DATA
LONGMONT SOUTH
1998

Date		Temperature			Relative Humidity	Dew Point	Precipitation Total	Wind			Solar Radiation	ASCE Calculation	
Month	Day	Max. (°F)	Min. (°F)	Average (°F)	Average (%)	Average (°F)	(inch)	Max (mph)	Total (miles)	Average (mph)	Total (Langl)	ET_r Alfalfa (inch)	ET_o Grass (inch)
11	16	60.4	31.5	45.3	55.9	29.8		14.1	95.4	4.0	239.4		
11	17	55.4	31.1	41.7	64.2	29.9		29.6	91.4	3.8	178.9		
11	18	56.4	31.0	45.8	40.6	21.2	0.02	44.3	318.9	13.3	271.3		
11	19	48.6	30.0	36.3	71.1	27.0		20.5	98.1	4.1	234.2		
11	20	55.6	19.3	34.4	56.8	18.4		10.2	76.3	3.2	270.6		
11	21	66.6	23.8	53.6	28.9	21.8	0.01	33.4	182.3	7.6	198.0		
11	22	73.6	49.2	62.3	23.0	23.5	0.01	38.3	243.0	10.1	268.2		
11	23	58.7	30.9	45.4	42.8	22.6		15.3	86.5	3.6	255.3		
11	24	70.1	25.8	52.3	32.4	17.7		40.0	260.0	10.8	265.7		
11	25	61.2	32.9	48.4	39.2	23.0		27.1	139.9	5.8	113.9		
11	26	69.2	28.2	46.6	56.6	30.1		10.7	71.6	3.0	257.7		
11	27	71.3	30.4	48.8	52.7	30.5		9.2	77.6	3.2	246.3		
11	28	59.1	33.6	45.0	52.2	27.7		12.9	72.5	3.0	144.0		
11	29	65.2	35.2	51.9	43.3	29.4		26.7	165.6	6.9	154.1		
11	30	66.5	30.4	49.5	41.9	25.4		25.3	120.7	5.0	259.6		
12	1	67.7	29.4	46.2	49.3	26.3		10.2	72.7	3.0	246.6		
12	2	70.8	29.7	47.5	47.0	25.2		20.8	107.6	4.5	249.1		
12	3	66.3	27.8	45.5	45.5	23.4		13.7	72.2	3.0	242.3		
12	4	61.1	24.4	42.8	52.5	25.2		16.9	97.3	4.1	212.6		
12	5	41.1	21.0	30.9	68.8	20.9		20.2	95.8	4.0	198.7		
12	6	35.9	18.9	26.5	84.8	22.3		11.6	70.1	2.9	190.1		
12	7	39.0	13.7	25.3	58.7	11.6		12.5	90.1	3.8	216.2		
12	8	38.0	9.1	24.7	61.0	12.3		8.5	58.0	2.4	121.1		
12	9	31.0	19.0	26.4	89.4	23.7	0.20	21.4	161.4	6.7	79.3		
12	10	27.4	2.3	14.0	94.1	13.6	0.02	5.1	48.4	2.0	226.9		
12	11	40.9	3.9	22.1	80.4	17.0		9.5	61.1	2.5	237.4		
12	12	39.9	14.0	26.1	77.3	20.1		12.0	72.8	3.0	151.2		
12	13	50.1	13.8	29.6	68.6	19.9		8.3	54.0	2.3	240.6		
12	14	59.6	20.4	36.6	58.5	22.5		10.3	66.7	2.8	242.2		

TABLE B12
NCWCD WEATHER STATION DATA
LONGMONT SOUTH
1998

Date		Temperature			Relative Humidity	Dew Point	Precipitation Total	Wind			Solar Radiation	ASCE Calculation	
Month	Day	Max. (°F)	Min. (°F)	Average (°F)	Average (%)	Average (°F)	(inch)	Max (mph)	Total (miles)	Average (mph)	Total (Langl)	ET_r Alfalfa (inch)	ET_o Grass (inch)
12	15	41.5	22.4	32.9	69.0	23.7		14.0	79.1	3.3	234.0		
12	16	46.2	23.4	33.1	77.1	26.0		13.1	83.3	3.5	217.7		
12	17	63.7	20.8	42.2	56.0	23.2	0.01	25.1	123.2	5.1	230.1		
12	18	56.9	7.9	31.0	69.1	20.7	0.02	29.7	189.2	7.9	148.5		
12	19	8.1	0.0	3.8	88.6	1.3	0.04	13.1	153.4	6.4	139.4		
12	20	2.9	-2.4	-0.2	88.1	-2.7	0.18	11.4	120.5	5.0	146.6		
12	21	7.3	-17.0	-4.0	85.0	-6.4	0.10	10.5	65.3	2.7	161.3		
12	22	11.6	-18.7	-4.2	84.6	-5.7		6.6	49.1	2.0	248.4		
12	23	10.9	-13.3	-2.6	85.3	-4.8		8.2	64.9	2.7	246.3		
12	24	32.6	-12.2	4.4	80.4	0.7	0.02	29.8	105.5	4.4	143.1		
12	25	44.9	6.4	32.2	51.0	16.2	0.02	40.3	290.5	12.1	149.9		
12	26	52.5	33.3	43.4	45.3	23.1		35.0	287.5	12.0	185.4		
12	27	45.3	31.4	39.0	46.2	19.7		24.1	201.6	8.4	213.5		
12	28	50.0	36.1	44.7	42.8	23.5	0.04	47.9	403.9	16.8	154.1		
12	29	52.7	27.7	40.7	63.5	28.2		35.8	139.0	5.8	235.8		
12	30	60.8	35.0	48.4	52.2	29.2		40.0	275.2	11.5	148.3		
12	31	41.5	27.1	33.0	85.2	28.9		9.5	65.4	2.7	159.5		
							10.27						**37.90**

Appendix C: Irrigation Demands

APPENIDIX C
Irrigation Requirement Supporting Calculations

To determine the required amount of irrigation water required, information was obtained from the Northern Colorado Water Conservancy District's (NCWCD) website. The irrigation water required is calculated by applying a crop coefficient (K_C) to the historical evapotranspiration rate (ET_o) to determine an evapotranspiration rate for the specific grass type (ET_{LAWN}). Next, an effective rainfall rate (Eff. Rain) is calculated for each month of the irrigation season by multiplying the average rainfall rate based on historical rain gauge data, by a factor of 1.0 or 0.5 depending on the month. The irrigation water needed is the difference between the effective evapotranspiration rate and the effective rainfall. An irrigation efficiency factor (I.E.) of 0.80 is then applied to this number and the final irrigation water required is determined.

Key to Table:

ET_o = Historical Grass Reference evapotranspiration for the growing season of April 1 to October 31
K_C = Crop coefficient for cool season turfgrass mowed at 2.0 to 3.0 inches and depending
upon the various uses of the lawn
ET_{LAWN} = Water requirement for the lawn (ET_o x K_C)
Rain = Historical rainfall
Eff. Rain = Effective rainfall 100% for April, 50% for all other months
Water Need = ET_{LAWN} – Effective Rainfall
I.E. = Irrigation efficiency which includes sprinkler system performance and management capability
IWR = Irrigation Water Requirement in inches. IWR = Water Need / I.E.

The IWR is calculated in Tables C1 – C7 (Appendix C).

TABLE C1
IRRIGATION REQUIREMENT SUMMARY
AVERAGE YEAR SCENARIO
HIGH-PERFORMANCE LAWN

Description	Units	Monthly Irrigation Requirement							Total
		April 4	May 5	June 6	July 7	August 8	September 9	October 10	
ET_o Grass	(inches)	4.30	5.41	6.37	6.98	5.79	4.43	2.89	**36.16**
K_o		0.90	0.90	0.90	0.90	0.90	0.90	0.90	
ET_{LAWN}	(inches)	3.87	4.87	5.73	6.28	5.21	3.99	2.60	**32.54**
Rain	(inches)	1.92	1.46	1.17	1.11	1.25	1.01	1.06	**8.98**
Effective Rain Ratio		1.00	0.50	0.50	0.50	0.50	0.50	0.50	
Effective Rain	(inches)	1.92	0.73	0.59	0.56	0.63	0.50	0.53	**5.45**
Irr. Need	(inches)	1.94	4.14	5.14	5.73	4.59	3.48	2.07	**27.09**
I.E.		0.80	0.80	0.80	0.80	0.80	0.80	0.80	
I.W.R.	(inches)	2.43	5.18	6.43	7.16	5.73	4.35	2.58	**33.86**
I.W.R.	(acre-ft/acre)	0.20	0.43	0.54	0.60	0.48	0.36	0.22	**2.82**
I.W.R.	(gal/acre)	65,974	140,626	174,594	194,450	155,695	118,163	70,198	**919,700**

TABLE C2
IRRIGATION REQUIREMENT SUMMARY
AVERAGE YEAR SCENARIO
TRADITIONAL LAWN

Description	Units	Monthly Irrigation Requirement							Total
		April 4	May 5	June 6	July 7	August 8	September 9	October 10	
ET_o Grass	(inches)	4.30	5.41	6.37	6.98	5.79	4.43	2.89	**36.16**
K_o		0.81	0.81	0.81	0.81	0.81	0.81	0.81	
ET_{LAWN}	(inches)	3.48	4.38	5.16	5.65	4.69	3.59	2.34	**29.29**
Rain	(inches)	1.92	1.46	1.17	1.11	1.25	1.01	1.06	**8.98**
Effective Rain Ratio		1.00	0.50	0.50	0.50	0.50	0.50	0.50	
Effective Rain	(inches)	1.92	0.73	0.59	0.56	0.63	0.50	0.53	**5.45**
Irr. Need	(inches)	1.56	3.66	4.57	5.10	4.07	3.08	1.81	**23.84**
I.E.		0.80	0.80	0.80	0.80	0.80	0.80	0.80	
I.W.R.	(inches)	1.95	4.57	5.71	6.37	5.08	3.85	2.26	**29.80**
I.W.R.	(acre-ft/acre)	0.16	0.38	0.48	0.53	0.42	0.32	0.19	**2.48**
I.W.R.	(gal/acre)	52,849	124,094	155,147	173,121	137,999	104,634	61,377	**809,220**

TABLE C3
IRRIGATION REQUIREMENT SUMMARY
AVERAGE YEAR SCENARIO
LOW-MAINTENANCE LAWN

Description	Units	Monthly Irrigation Requirement							Total
		April 4	May 5	June 6	July 7	August 8	September 9	October 10	
ET_o Grass	(inches)	4.30	5.41	6.37	6.98	5.79	4.43	2.89	**36.16**
K_o		0.72	0.72	0.72	0.72	0.72	0.72	0.72	
ET_{LAWN}	(inches)	3.09	3.90	4.58	5.03	4.17	3.19	2.08	**26.04**
Rain	(inches)	1.92	1.46	1.17	1.11	1.25	1.01	1.06	**8.98**
Effective Rain Ratio		1.00	0.50	0.50	0.50	0.50	0.50	0.50	
Effective Rain	(inches)	1.92	0.73	0.59	0.56	0.63	0.50	0.53	**5.45**
Irr. Need	(inches)	1.17	3.17	4.00	4.47	3.54	2.68	1.55	**20.58**
I.E.		0.80	0.80	0.80	0.80	0.80	0.80	0.80	
I.W.R.	(inches)	1.46	3.96	5.00	5.59	4.43	3.35	1.94	**25.73**
I.W.R.	(acre-ft/acre)	0.12	0.33	0.42	0.47	0.37	0.28	0.16	**2.14**
I.W.R.	(gal/acre)	39,723	107,561	135,700	151,792	120,303	91,105	52,556	**698,740**

FIGURE C1

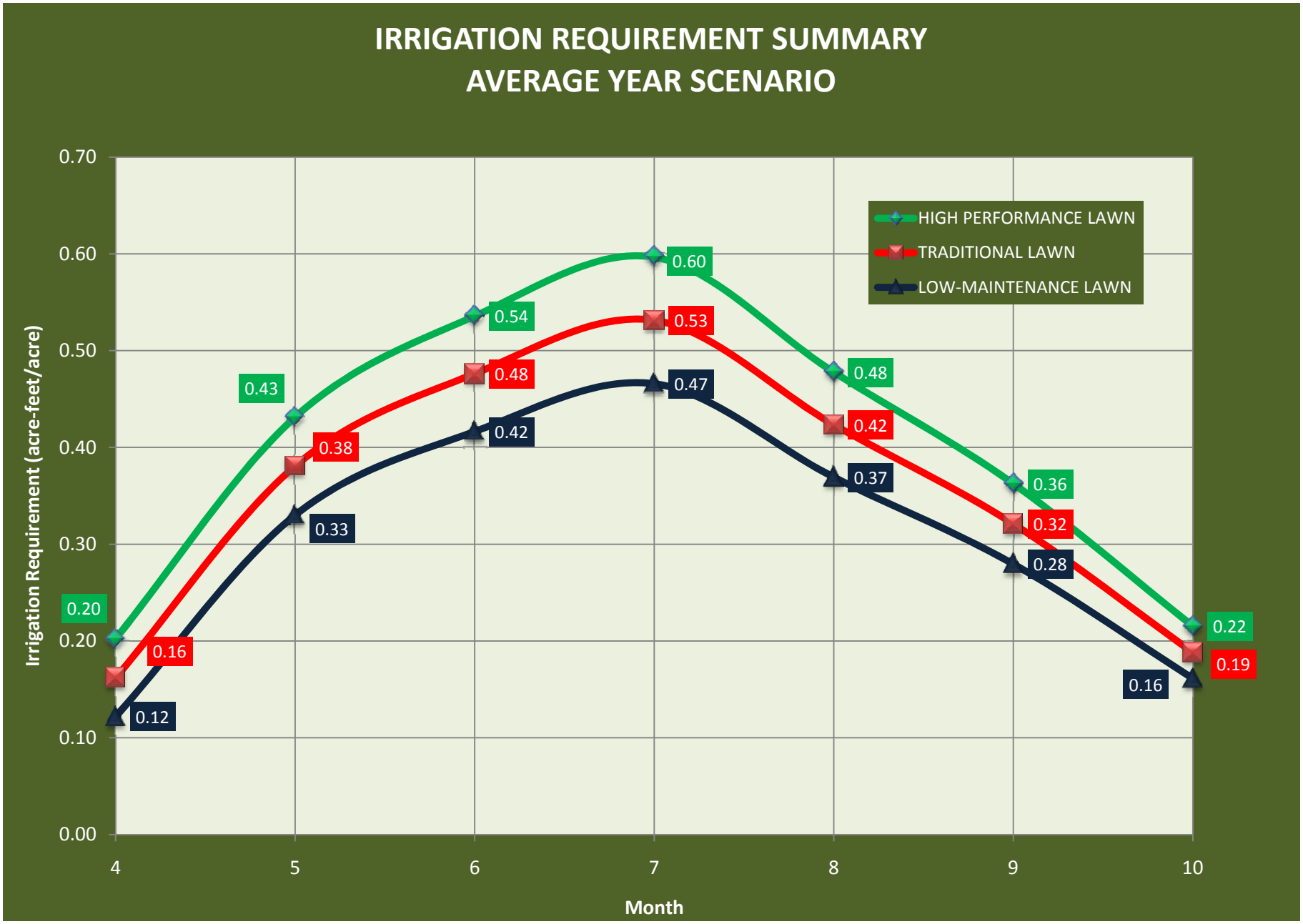
IRRIGATION REQUIREMENT SUMMARY
AVERAGE YEAR SCENARIO
HIGH PERFORMANCE LAWN
TRADITIONAL LAWN
LOW-MAINTENANCE LAWN
Irrigation Requirement (acre-feet/acre)
0.70
0.60
0.50
0.40
0.30
0.20
0.10
0.00
4
5
6
7
8
9
10
Month
0.20
0.43
0.54
0.60
0.48
0.36
0.22
0.16
0.38
0.48
0.53
0.42
0.32
0.19
0.12
0.33
0.42
0.47
0.37
0.28
0.16

TABLE C4
IRRIGATION REQUIREMENT SUMMARY
DROUGHT YEAR SCENARIO
HIGH-PERFORMANCE LAWN

Description	Units	Monthly Irrigation Requirement							Total
		April 4	May 5	June 6	July 7	August 8	September 9	October 10	
ET_o Grass (2002)	(inches)	5.14	5.18	7.01	7.94	6.41	4.65	2.54	**38.87**
K_o		0.90	0.90	0.90	0.90	0.90	0.90	0.90	
ET_{LAWN}	(inches)	4.63	4.66	6.31	7.15	5.77	4.19	2.29	**34.98**
Rain (2002)	(inches)	0.21	2.18	0.94	0.04	0.63	0.97	1.04	**6.01**
Effective Rain Ratio		1.00	0.50	0.50	0.50	0.50	0.50	0.50	
Effective Rain	(inches)	0.21	1.09	0.47	0.02	0.32	0.49	0.52	**3.11**
Irr. Need	(inches)	4.42	3.57	5.84	7.13	5.45	3.70	1.77	**31.87**
I.E.		0.80	0.80	0.80	0.80	0.80	0.80	0.80	
I.W.R.	(inches)	5.52	4.47	7.30	8.91	6.82	4.63	2.21	**39.84**
I.W.R.	(acre-ft/acre)	0.46	0.37	0.61	0.74	0.57	0.39	0.18	**3.32**
I.W.R.	(gal/acre)	149,914	121,262	198,222	241,913	185,152	125,607	59,952	**1,082,022**

TABLE C5
IRRIGATION REQUIREMENT SUMMARY
DROUGHT YEAR SCENARIO
TRADITIONAL LAWN

Description	Units	Monthly Irrigation Requirement							Total
		April 4	May 5	June 6	July 7	August 8	September 9	October 10	
ET_o Grass (2002)	(inches)	5.14	5.18	7.01	7.94	6.41	4.65	2.54	**38.87**
K_o		0.81	0.81	0.81	0.81	0.81	0.81	0.81	
ET_{LAWN}	(inches)	4.16	4.20	5.68	6.43	5.19	3.77	2.06	**31.48**
Rain (2002)	(inches)	0.21	2.18	0.94	0.04	0.63	0.97	1.04	**6.01**
Effective Rain Ratio		1.00	0.50	0.50	0.50	0.50	0.50	0.50	
Effective Rain	(inches)	0.21	1.09	0.47	0.02	0.32	0.49	0.52	**3.11**
Irr. Need	(inches)	3.95	3.11	5.21	6.41	4.88	3.28	1.54	**28.37**
I.E.		0.80	0.80	0.80	0.80	0.80	0.80	0.80	
I.W.R.	(inches)	4.94	3.88	6.51	8.01	6.10	4.10	1.92	**35.47**
I.W.R.	(acre-ft/acre)	0.41	0.32	0.54	0.67	0.51	0.34	0.16	**2.96**
I.W.R.	(gal/acre)	134,210	105,435	176,804	217,654	165,567	111,400	52,192	**963,262**

TABLE C6
IRRIGATION REQUIREMENT SUMMARY
DROUGHT YEAR SCENARIO
LOW-MAINTENANCE LAWN

Description	Units	Monthly Irrigation Requirement							Total
		April 4	May 5	June 6	July 7	August 8	September 9	October 10	
ET_o Grass (2002)	(inches)	5.14	5.18	7.01	7.94	6.41	4.65	2.54	**38.87**
K_o		0.72	0.72	0.72	0.72	0.72	0.72	0.72	
ET_{LAWN}	(inches)	3.70	3.73	5.05	5.72	4.62	3.35	1.83	**27.99**
Rain (2002)	(inches)	0.21	2.18	0.94	0.04	0.63	0.97	1.04	**6.01**
Effective Rain Ratio		1.00	0.50	0.50	0.50	0.50	0.50	0.50	
Effective Rain	(inches)	0.21	1.09	0.47	0.02	0.32	0.49	0.52	**3.11**
Irr. Need	(inches)	3.49	2.64	4.58	5.70	4.30	2.86	1.31	**24.88**
I.E.		0.80	0.80	0.80	0.80	0.80	0.80	0.80	
I.W.R.	(inches)	4.36	3.30	5.72	7.12	5.38	3.58	1.64	**31.10**
I.W.R.	(acre-ft/acre)	0.36	0.27	0.48	0.59	0.45	0.30	0.14	**2.59**
I.W.R.	(gal/acre)	118,505	89,609	155,386	193,394	145,983	97,193	44,431	**844,502**

FIGURE C2

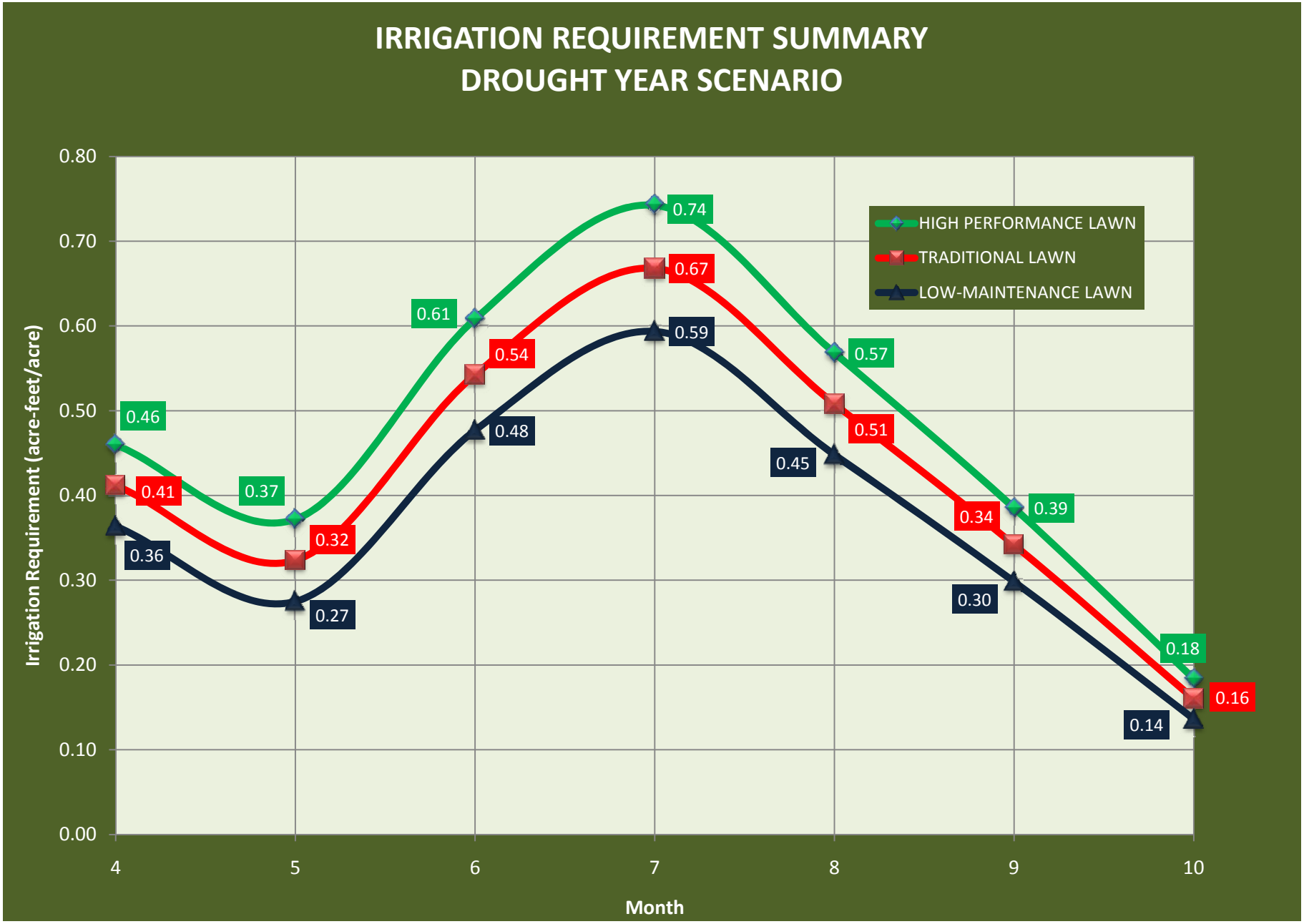
IRRIGATION REQUIREMENT SUMMARY
DROUGHT YEAR SCENARIO
Irrigation Requirement (acre-feet/acre)
0.80
0.70
0.60
0.50
0.40
0.30
0.20
0.10
0.00
4
5
6
7
8
9
10
Month
HIGH PERFORMANCE LAWN
TRADITIONAL LAWN
LOW-MAINTENANCE LAWN
0.46
0.37
0.61
0.74
0.57
0.39
0.18
0.41
0.32
0.54
0.67
0.51
0.34
0.16
0.36
0.27
0.48
0.59
0.45
0.30
0.14

TABLE C7
IRRIGATION REQUIREMENT SUMMARY
PUBLIC WORKS SCENARIO

Description	Units	Monthly Irrigation Requirement[1]							Total
		April	May	June	July	August	September	October	
		4	5	6	7	8	9	10	
I.W.R.	(inches)	8.57	8.86	8.57	8.86	8.86	8.57	8.86	**61.15**
I.W.R.	(acre-ft/acre)	0.71	0.74	0.71	0.74	0.74	0.71	0.74	**5.10**
I.W.R.	(gal/acre)	232,747	240,623	232,747	240,623	240,623	232,747	240,623	**1,660,732**

Notes:

[1]based on irrigation demand of 2 inches per week from April through October

FIGURE C3

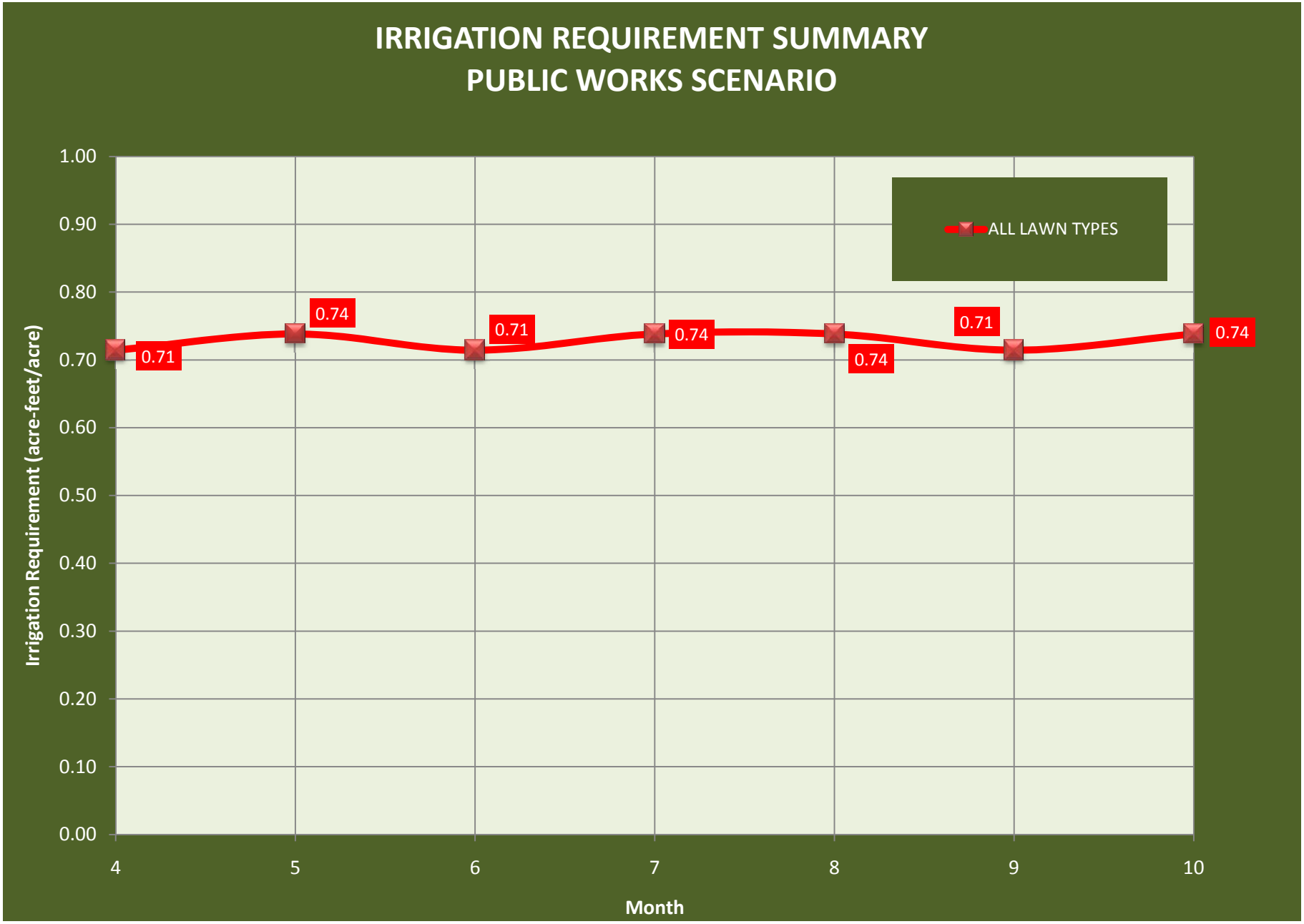
IRRIGATION REQUIREMENT SUMMARY
PUBLIC WORKS SCENARIO
ALL LAWN TYPES
Irrigation Requirement (acre-feet/acre)
1.00
0.90
0.80
0.70
0.60
0.50
0.40
0.30
0.20
0.10
0.00
0.71
0.74
0.71
0.74
0.74
0.71
0.74
4
5
6
7
8
9
10
Month

TABLE C8
IRRIGATION DEMAND
PRIORITY 1 PARKS

Park I.D.	Park Description	Priority	Irrigated Area (acres)	Average Year Scenario[1]							
				April 4 (acre-ft)	May 5 (acre-ft)	June 6 (acre-ft)	July 7 (acre-ft)	August 8 (acre-ft)	September 9 (acre-ft)	October 10 (acre-ft)	Total (acre-ft)
PA-1	AISIK'S MEADOW PARK	1	2.9	0.5	1.1	1.4	1.6	1.2	0.9	0.6	**7.3**
PA-4	FIRESTONE CENTRAL PARK	1	23.0	3.7	8.8	11.0	12.2	9.7	7.4	4.3	**57.1**
		1	67.0	10.9	25.5	31.9	35.6	28.4	21.5	12.6	**166.4**
PA-6	FIRESTONE SPORTS COMPLEX	1	13.9	2.3	5.3	6.6	7.4	5.9	4.5	2.6	**34.5**
			TOTAL	**17.3**	**40.7**	**50.9**	**56.8**	**45.2**	**34.3**	**20.1**	**265.3**

Notes:

[1]based on a traditional lawn

TABLE C8
IRRIGATION DEMAND
PRIORITY 1 PARKS

Park I.D.	Park Description	Priority	Irrigated Area (acres)	Drought Year Scenario[1]							
				April 4 (acre-ft)	May 5 (acre-ft)	June 6 (acre-ft)	July 7 (acre-ft)	August 8 (acre-ft)	September 9 (acre-ft)	October 10 (acre-ft)	Total (acre-ft)
PA-1	AISIK'S MEADOW PARK	1	2.9	1.2	1.0	1.6	2.0	1.5	1.0	0.5	**8.7**
PA-4	FIRESTONE CENTRAL PARK	1	23.0	9.5	7.4	12.5	15.4	11.7	7.9	3.7	**68.0**
		1	67.0	27.6	21.7	36.4	44.8	34.0	22.9	10.7	**198.1**
PA-6	FIRESTONE SPORTS COMPLEX	1	13.9	5.7	4.5	7.5	9.3	7.0	4.7	2.2	**41.0**
			TOTAL	**44.0**	**34.6**	**58.0**	**71.4**	**54.3**	**36.5**	**17.1**	**315.8**

Notes:

[1]based on a traditional lawn

TABLE C8
IRRIGATION DEMAND
PRIORITY 1 PARKS

Park I.D.	Park Description	Priority	Irrigated Area (acres)	Public Works Scenario							
				April 4 (acre-ft)	May 5 (acre-ft)	June 6 (acre-ft)	July 7 (acre-ft)	August 8 (acre-ft)	September 9 (acre-ft)	October 10 (acre-ft)	Total (acre-ft)
PA-1	AISIK'S MEADOW PARK	1	2.9	2.1	2.2	2.1	2.2	2.2	2.1	2.2	**15.0**
PA-4	FIRESTONE CENTRAL PARK	1	23.0	16.4	17.0	16.4	17.0	17.0	16.4	17.0	**117.3**
		1	67.0	47.9	49.5	47.9	49.5	49.5	47.9	49.5	**341.5**
PA-6	FIRESTONE SPORTS COMPLEX	1	13.9	9.9	10.2	9.9	10.2	10.2	9.9	10.2	**70.7**
			TOTAL	**76.3**	**78.9**	**76.3**	**78.9**	**78.9**	**76.3**	**78.9**	**544.5**

Notes:

[1]based on a traditional lawn

TABLE C9
IRRIGATION DEMAND
PRIORITY 2 PARKS

Park I.D.	Park Description	Priority	Irrigated Area (acres)	Average Year Scenario[1]							
				April 4 (acre-ft)	May 5 (acre-ft)	June 6 (acre-ft)	July 7 (acre-ft)	August 8 (acre-ft)	September 9 (acre-ft)	October 10 (acre-ft)	Total (acre-ft)
PA-3	COMMUNITY PARK	2	20.5	3.3	7.8	9.7	10.9	8.7	6.6	3.9	**50.8**
PA-5	FIRSESTONE REGIONAL PARK	2	24.5	4.0	9.3	11.6	13.0	10.4	7.8	4.6	**60.7**
PA-7	HARNEY PARK	2	4.1	0.7	1.5	1.9	2.2	1.7	1.3	0.8	**10.1**
PA-14	SADDLEBACK HEIGHTS PARK	2	2.0	0.3	0.8	1.0	1.1	0.9	0.7	0.4	**5.0**
			TOTAL	**8.3**	**19.4**	**24.3**	**27.1**	**21.6**	**16.4**	**9.6**	**126.6**

Notes:

[1]based on a traditional lawn

TABLE C9
IRRIGATION DEMAND
PRIORITY 2 PARKS

Park I.D.	Park Description	Priority	Irrigated Area (acres)	Drought Year Scenario[1]							
				April 4 (acre-ft)	May 5 (acre-ft)	June 6 (acre-ft)	July 7 (acre-ft)	August 8 (acre-ft)	September 9 (acre-ft)	October 10 (acre-ft)	Total (acre-ft)
PA-3	COMMUNITY PARK	2	20.5	8.4	6.6	11.1	13.7	10.4	7.0	3.3	**60.5**
PA-5	FIRSESTONE REGIONAL PARK	2	24.5	10.1	7.9	13.3	16.3	12.4	8.4	3.9	**72.3**
PA-7	HARNEY PARK	2	4.1	1.7	1.3	2.2	2.7	2.1	1.4	0.6	**12.0**
PA-14	SADDLEBACK HEIGHTS PARK	2	2.0	0.8	0.7	1.1	1.4	1.0	0.7	0.3	**6.0**
			TOTAL	**21.0**	**16.5**	**27.7**	**34.1**	**25.9**	**17.4**	**8.2**	**150.7**

Notes:

[1]based on a traditional lawn

TABLE C9
IRRIGATION DEMAND
PRIORITY 2 PARKS

Park I.D.	Park Description	Priority	Irrigated Area (acres)	Public Works Scenario							
				April 4 (acre-ft)	May 5 (acre-ft)	June 6 (acre-ft)	July 7 (acre-ft)	August 8 (acre-ft)	September 9 (acre-ft)	October 10 (acre-ft)	Total (acre-ft)
PA-3	COMMUNITY PARK	2	20.5	14.6	15.1	14.6	15.1	15.1	14.6	15.1	**104.3**
PA-5	FIRSESTONE REGIONAL PARK	2	24.5	17.5	18.1	17.5	18.1	18.1	17.5	18.1	**124.6**
PA-7	HARNEY PARK	2	4.1	2.9	3.0	2.9	3.0	3.0	2.9	3.0	**20.6**
PA-14	SADDLEBACK HEIGHTS PARK	2	2.0	1.4	1.5	1.4	1.5	1.5	1.4	1.5	**10.3**
			TOTAL	**36.4**	**37.7**	**36.4**	**37.7**	**37.7**	**36.4**	**37.7**	**259.9**

Notes:

[1]based on a traditional lawn

TABLE C10
IRRIGATION DEMAND
PRIORITY 3 PARKS

Park I.D.	Park Description	Priority	Irrigated Area (acres)	Average Year Scenario[1]							
				April 4 (acre-ft)	May 5 (acre-ft)	June 6 (acre-ft)	July 7 (acre-ft)	August 8 (acre-ft)	September 9 (acre-ft)	October 10 (acre-ft)	Total (acre-ft)
PA-2	BOOTH FARMS PARK	3	5.4	0.9	2.1	2.6	2.9	2.3	1.7	1.0	**13.4**
		3	2.1	0.3	0.8	1.0	1.1	0.9	0.7	0.4	**5.2**
PA-8	HART PARK	3	5.9	0.9	2.2	2.8	3.1	2.5	1.9	1.1	**14.5**
PA-9	HART PARK EXPANSION	3	5.6	0.9	2.1	2.6	2.9	2.4	1.8	1.0	**13.8**
PA-10	MOUNTAIN SHADOWS PARK	3	12.8	2.1	4.9	6.1	6.8	5.4	4.1	2.4	**31.7**
PA-11	NEIGHBORS POINT PARK	3	16.7	2.7	6.4	8.0	8.9	7.1	5.4	3.1	**41.5**
PA-12	PATTERSON PARK	3	2.6	0.4	1.0	1.2	1.4	1.1	0.8	0.5	**6.3**
PA-13	PRAIRIE RIDGE PARK	3	3.8	0.6	1.5	1.8	2.0	1.6	1.2	0.7	**9.5**
PA-15	SADDLEBACK PARK	3	4.3	0.7	1.6	2.0	2.3	1.8	1.4	0.8	**10.6**
PA-16	SAGEBRUSH PARK	3	4.3	0.7	1.6	2.0	2.3	1.8	1.4	0.8	**10.6**
PA-17	STONERIDGE PARK	3	8.9	1.4	3.4	4.2	4.7	3.8	2.9	1.7	**22.2**
PA-18	SABLE GLEN PARK	3	11.5	1.9	4.4	5.5	6.1	4.9	3.7	2.2	**28.5**
			TOTAL	**13.6**	**31.9**	**39.8**	**44.5**	**35.4**	**26.9**	**15.8**	**207.8**

Notes:

[1]based on a traditional lawn

TABLE C10
IRRIGATION DEMAND
PRIORITY 3 PARKS

Park I.D.	Park Description	Priority	Irrigated Area (acres)	Drought Year Scenario[1]							
				April 4 (acre-ft)	May 5 (acre-ft)	June 6 (acre-ft)	July 7 (acre-ft)	August 8 (acre-ft)	September 9 (acre-ft)	October 10 (acre-ft)	Total (acre-ft)
PA-2	BOOTH FARMS PARK	3	5.4	2.2	1.7	2.9	3.6	2.7	1.8	0.9	**15.9**
		3	2.1	0.9	0.7	1.1	1.4	1.1	0.7	0.3	**6.2**
PA-8	HART PARK	3	5.9	2.4	1.9	3.2	3.9	3.0	2.0	0.9	**17.3**
PA-9	HART PARK EXPANSION	3	5.6	2.3	1.8	3.0	3.7	2.8	1.9	0.9	**16.4**
PA-10	MOUNTAIN SHADOWS PARK	3	12.8	5.3	4.1	6.9	8.5	6.5	4.4	2.0	**37.7**
PA-11	NEIGHBORS POINT PARK	3	16.7	6.9	5.4	9.1	11.2	8.5	5.7	2.7	**49.4**
PA-12	PATTERSON PARK	3	2.6	1.1	0.8	1.4	1.7	1.3	0.9	0.4	**7.5**
PA-13	PRAIRIE RIDGE PARK	3	3.8	1.6	1.2	2.1	2.6	1.9	1.3	0.6	**11.3**
PA-15	SADDLEBACK PARK	3	4.3	1.8	1.4	2.3	2.9	2.2	1.5	0.7	**12.6**
PA-16	SAGEBRUSH PARK	3	4.3	1.8	1.4	2.3	2.9	2.2	1.5	0.7	**12.6**
PA-17	STONERIDGE PARK	3	8.9	3.7	2.9	4.8	6.0	4.5	3.1	1.4	**26.4**
PA-18	SABLE GLEN PARK	3	11.5	4.7	3.7	6.2	7.7	5.8	3.9	1.8	**33.9**
			TOTAL	**34.5**	**27.1**	**45.4**	**55.9**	**42.5**	**28.6**	**13.4**	**247.4**

Notes:

[1]based on a traditional lawn

TABLE C10
IRRIGATION DEMAND
PRIORITY 3 PARKS

Park I.D.	Park Description	Priority	Irrigated Area (acres)	Public Works Scenario							
				April 4 (acre-ft)	May 5 (acre-ft)	June 6 (acre-ft)	July 7 (acre-ft)	August 8 (acre-ft)	September 9 (acre-ft)	October 10 (acre-ft)	Total (acre-ft)
PA-2	BOOTH FARMS PARK	3	5.4	3.9	4.0	3.9	4.0	4.0	3.9	4.0	**27.5**
		3	2.1	1.5	1.6	1.5	1.6	1.6	1.5	1.6	**10.7**
PA-8	HART PARK	3	5.9	4.2	4.3	4.2	4.3	4.3	4.2	4.3	**29.8**
PA-9	HART PARK EXPANSION	3	5.6	4.0	4.1	4.0	4.1	4.1	4.0	4.1	**28.3**
PA-10	MOUNTAIN SHADOWS PARK	3	12.8	9.1	9.4	9.1	9.4	9.4	9.1	9.4	**65.0**
PA-11	NEIGHBORS POINT PARK	3	16.7	11.9	12.3	11.9	12.3	12.3	11.9	12.3	**85.2**
PA-12	PATTERSON PARK	3	2.6	1.8	1.9	1.8	1.9	1.9	1.8	1.9	**13.0**
PA-13	PRAIRIE RIDGE PARK	3	3.8	2.7	2.8	2.7	2.8	2.8	2.7	2.8	**19.5**
PA-15	SADDLEBACK PARK	3	4.3	3.1	3.2	3.1	3.2	3.2	3.1	3.2	**21.8**
PA-16	SAGEBRUSH PARK	3	4.3	3.1	3.2	3.1	3.2	3.2	3.1	3.2	**21.8**
PA-17	STONERIDGE PARK	3	8.9	6.4	6.6	6.4	6.6	6.6	6.4	6.6	**45.5**
PA-18	SABLE GLEN PARK	3	11.5	8.2	8.5	8.2	8.5	8.5	8.2	8.5	**58.5**
			TOTAL	**59.8**	**61.8**	**59.8**	**61.8**	**61.8**	**59.8**	**61.8**	**426.5**

Notes:

[1]based on a traditional lawn

Appendix D: Irrigation Ditch Diversion Records

TABLE D1
COAL RIDGE DITCH
DIVERSION SUMMARY
50-YEAR SUMMARY

Year	Monthly Irrigation Diversions												Total
	January 1 (acre-ft)	February 2 (acre-ft)	March 3 (acre-ft)	April 4 (acre-ft)	May 5 (acre-ft)	June 6 (acre-ft)	July 7 (acre-ft)	August 8 (acre-ft)	September 9 (acre-ft)	October 10 (acre-ft)	November 11 (acre-ft)	December 12 (acre-ft)	(acre-ft)
Average[1]	**0.000**	**0.000**	**0.000**	**0.030**	**0.140**	**0.380**	**0.370**	**0.170**	**0.130**	**0.030**	**0.000**	**0.000**	**1.250**
Average[2002]	0.000	0.000	0.000	0.190	0.180	0.250	0.120	0.110	0.100	0.100	0.000	0.000	**1.050**

Notes:

[1]average diversion per share (50-Year Average)

[2002]average diversion per share during 2002 drought year

data taken from the Vogl Land - North Parcel Irrigation Report by Prominence Development Corp. (November 2005)

FIGURE D1

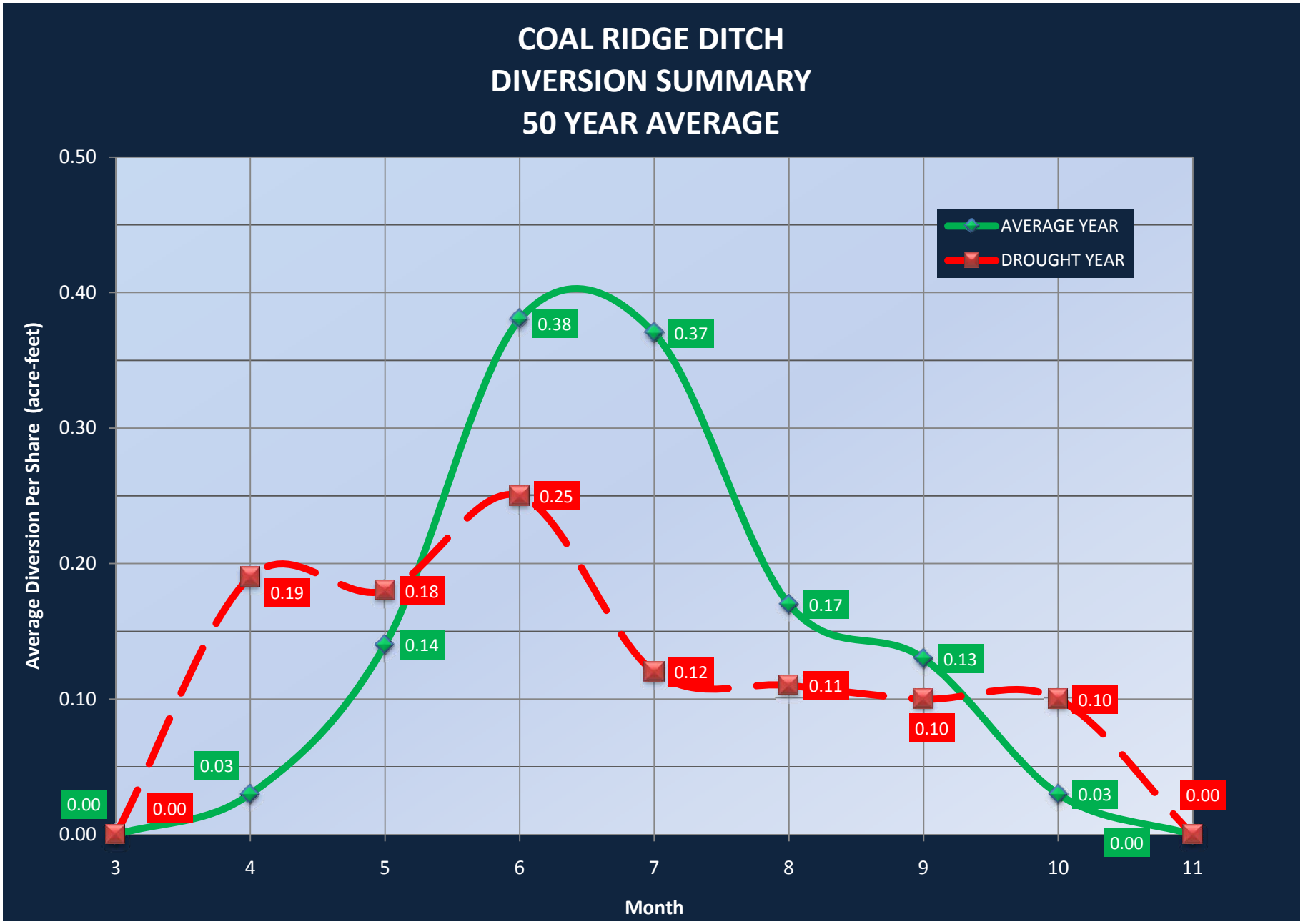
COAL RIDGE DITCH
DIVERSION SUMMARY
50 YEAR AVERAGE
AVERAGE YEAR
DROUGHT YEAR
Average Diversion Per Share (acre-feet)
0.50
0.40
0.30
0.20
0.10
0.00
3
4
5
6
7
8
9
10
11
Month
0.00
0.03
0.14
0.38
0.37
0.17
0.13
0.03
0.00
0.00
0.19
0.18
0.25
0.12
0.11
0.10
0.10
0.00

TABLE D2
HIGHLAND SOUTH SIDE DITCH (GODDING HOLLOW)
DIVERSION SUMMARY
1950 - 2005

Year	Monthly Irrigation Diversions												Total
	January 1 (acre-ft)	February 2 (acre-ft)	March 3 (acre-ft)	April 4 (acre-ft)	May 5 (acre-ft)	June 6 (acre-ft)	July 7 (acre-ft)	August 8 (acre-ft)	September 9 (acre-ft)	October 10 (acre-ft)	November 11 (acre-ft)	December 12 (acre-ft)	(acre-ft)
1950	0.0	0.0	0.0	0.0	839.0	1,484.0	814.0	140.0	40.3	246.0	0.0	0.0	**3,563.3**
1951	0.0	0.0	0.0	0.0	899.0	901.0	1,359.0	734.0	298.0	0.0	0.0	0.0	**4,191.0**
1952	0.0	0.0	0.0	0.0	179.0	1,894.0	1,087.0	538.0	109.0	0.0	0.0	0.0	**3,807.0**
1953	0.0	0.0	238.0	69.4	607.0	1,470.0	965.0	215.0	98.2	6.0	0.0	0.0	**3,668.6**
1954	0.0	0.0	47.6	0.0	663.0	97.2	29.8	27.3	19.8	0.0	0.0	0.0	**884.7**
1955	0.0	0.0	0.0	0.0	1,020.0	1,379.0	487.0	405.0	130.0	59.5	0.0	0.0	**3,480.5**
1956	0.0	0.0	0.0	0.0	1,049.0	1,660.0	734.0	245.0	171.0	9.9	0.0	0.0	**3,868.9**
1957	0.0	0.0	0.0	0.0	0.0	708.0	1,809.0	1,369.0	529.0	363.0	0.0	0.0	**4,778.0**
1958	0.0	0.0	0.0	0.0	0.0	1,295.0	972.0	376.0	143.0	0.0	0.0	0.0	**2,786.0**
1959	0.0	0.0	0.0	0.0	579.0	1,841.0	1,654.0	529.0	0.0	0.0	0.0	0.0	**4,603.0**
1960	0.0	0.0	0.0	188.0	327.0	1,978.0	1,262.0	224.0	202.0	69.4	0.0	0.0	**4,250.4**
1961	0.0	0.0	0.0	0.0	0.0	484.0	1,260.0	595.0	9.9	0.0	0.0	0.0	**2,348.9**
1962	0.0	0.0	0.0	0.0	1,422.0	1,351.0	2,565.0	419.0	49.6	0.0	0.0	0.0	**5,806.6**
1963	0.0	0.0	0.0	0.0	1,232.0	863.0	132.0	571.0	369.0	252.0	0.0	0.0	**3,419.0**
1964	0.0	0.0	0.0	0.0	988.0	1,621.0	495.0	212.0	66.4	46.0	0.0	0.0	**3,428.4**
1965	0.0	0.0	0.0	0.0	545.0	879.0	2,055.0	1,555.0	593.0	35.7	0.0	0.0	**5,662.7**
1966	0.0	0.0	0.0	0.0	353.0	1,699.0	430.0	292.0	597.0	1,275.0	0.0	0.0	**4,646.0**
1967	0.0	0.0	0.0	0.0	700.0	438.0	1,466.0	594.0	399.0	286.0	0.0	0.0	**3,883.0**
1968	0.0	0.0	0.0	59.5	611.0	2,120.0	1,924.0	509.0	662.0	311.0	0.0	0.0	**6,196.5**
1969	0.0	0.0	0.0	121.0	530.0	1,097.0	2,886.0	401.0	335.0	87.3	0.0	0.0	**5,457.3**
1970	0.0	0.0	0.0	0.0	1,105.0	1,164.0	2,729.0	692.0	655.0	0.0	0.0	0.0	**6,345.0**
1971	0.0	0.0	0.0	0.0	256.0	2,505.0	2,698.0	788.0	378.0	0.0	0.0	0.0	**6,625.0**
1972	0.0	0.0	0.0	23.8	1,305.0	1,723.0	1,404.0	797.0	778.0	97.2	0.0	0.0	**6,128.0**
1973	0.0	0.0	0.0	0.0	270.0	2,204.0	2,648.0	1,012.0	446.0	0.0	0.0	0.0	**6,580.0**

TABLE D2
HIGHLAND SOUTH SIDE DITCH (GODDING HOLLOW)
DIVERSION SUMMARY
1950 - 2005

Year	Monthly Irrigation Diversions												Total
	January 1 (acre-ft)	February 2 (acre-ft)	March 3 (acre-ft)	April 4 (acre-ft)	May 5 (acre-ft)	June 6 (acre-ft)	July 7 (acre-ft)	August 8 (acre-ft)	September 9 (acre-ft)	October 10 (acre-ft)	November 11 (acre-ft)	December 12 (acre-ft)	(acre-ft)
1974	0.0	0.0	0.0	0.0	1,055.0	1,611.0	2,337.0	787.0	0.0	0.0	0.0	0.0	**5,790.0**
1975	0.0	0.0	0.0	0.0	742.0	1,706.0	2,535.0	1,204.0	52.6	0.0	0.0	0.0	**6,239.6**
1976	0.0	0.0	0.0	0.0	1,012.0	2,051.0	1,653.0	657.0	8.9	0.0	0.0	0.0	**5,381.9**
1977	0.0	0.0	0.0	0.0	768.0	1,617.0	576.0	149.0	39.7	0.0	0.0	0.0	**3,149.7**
1978	0.0	0.0	0.0	0.0	0.0	1,277.0	2,462.0	1,058.0	0.0	0.0	0.0	0.0	**4,797.0**
1979	0.0	0.0	0.0	0.0	0.0	904.0	2,426.0	1,089.0	611.0	157.0	0.0	0.0	**5,187.0**
1980	0.0	0.0	0.0	0.0	0.0	1,529.0	2,402.0	509.0	0.0	0.0	0.0	0.0	**4,440.0**
1981	0.0	0.0	0.0	0.0	256.0	944.0	1,812.0	292.0	0.0	0.0	0.0	0.0	**3,304.0**
1982	0.0	0.0	0.0	0.0	617.0	1,283.0	2,509.0	1,880.0	520.0	0.0	0.0	0.0	**6,809.0**
1983	0.0	0.0	0.0	0.0	0.0	381.0	1,970.0	1,763.0	978.0	159.0	0.0	0.0	**5,251.0**
1984	0.0	0.0	0.0	0.0	260.0	1,603.0	2,479.0	1,486.0	869.0	79.3	0.0	0.0	**6,776.3**
1985	0.0	0.0	0.0	0.0	500.0	1,976.0	1,956.0	1,246.0	256.0	0.0	0.0	0.0	**5,934.0**
1986	0.0	0.0	0.0	0.0	409.0	1,142.0	2,571.0	1,339.0	664.0	165.0	0.0	0.0	**6,290.0**
1987	0.0	0.0	0.0	0.0	505.0	1,627.0	1,741.0	915.0	199.0	0.0	0.0	0.0	**4,987.0**
1988	0.0	0.0	0.0	0.0	307.0	1,990.0	1,904.0	992.0	359.0	0.0	0.0	0.0	**5,552.0**
1989	0.0	0.0	0.0	0.0	725.0	925.0	1,619.0	1,072.0	65.0	0.0	0.0	0.0	**4,406.0**
1990	0.0	0.0	0.0	0.0	748.0	1,411.0	1,937.0	1,210.0	509.0	0.0	0.0	0.0	**5,815.0**
1991	0.0	0.0	0.0	0.0	679.0	1,636.0	2,548.0	1,525.0	98.6	0.0	0.0	0.0	**6,486.6**
1992	0.0	0.0	0.0	0.0	1,286.0	1,439.0	2,326.0	738.0	0.0	0.0	0.0	0.0	**5,789.0**
1993	0.0	0.0	0.0	0.0	760.0	1,640.0	2,866.0	2,135.0	618.0	0.0	0.0	0.0	**8,019.0**
1994	0.0	0.0	0.0	0.0	875.0	1,736.0	1,207.0	521.0	194.0	12.3	0.0	0.0	**4,545.3**
1995	0.0	0.0	0.0	0.0	0.0	0.0	1,803.0	2,651.0	449.0	0.0	0.0	0.0	**4,903.0**
1996	0.0	0.0	0.0	0.0	1,009.0	1,138.0	2,381.0	1,804.0	363.0	0.0	0.0	0.0	**6,695.0**
1997	0.0	0.0	0.0	0.0	422.0	893.0	2,751.0	1,258.0	686.0	0.0	0.0	0.0	**6,010.0**

TABLE D2
HIGHLAND SOUTH SIDE DITCH (GODDING HOLLOW)
DIVERSION SUMMARY
1950 - 2005

Year	Monthly Irrigation Diversions												Total
	January 1 (acre-ft)	February 2 (acre-ft)	March 3 (acre-ft)	April 4 (acre-ft)	May 5 (acre-ft)	June 6 (acre-ft)	July 7 (acre-ft)	August 8 (acre-ft)	September 9 (acre-ft)	October 10 (acre-ft)	November 11 (acre-ft)	December 12 (acre-ft)	(acre-ft)
1998	0.0	0.0	0.0	0.0	734.0	1,720.0	2,773.0	1,706.0	762.0	0.0	0.0	0.0	**7,695.0**
1999	0.0	0.0	0.0	366.0	35.7	1,150.0	2,337.0	1,501.0	474.0	0.0	0.0	0.0	**5,863.7**
2000	0.0	0.0	0.0	69.4	1,079.0	1,707.0	1,621.0	1,050.0	497.0	8.6	0.0	0.0	**6,032.0**
2001	0.0	0.0	0.0	0.0	427.0	1,773.0	2,043.0	661.0	403.0	0.0	0.0	0.0	**5,307.0**
2002	0.0	0.0	0.0	0.0	501.5	665.1	0.0	23.8	102.0	234.2	0.0	0.0	**1,526.6**
2003	0.0	0.0	0.0	0.0	89.3	1,429.1	2,611.3	473.3	307.5	0.0	0.0	0.0	**4,910.5**
2004	0.0	0.0	0.0	0.0	538.4	519.0	296.4	180.7	0.0	0.0	0.0	0.0	**1,534.5**
2005	0.0	0.0	0.0	0.0	461.4	799.7	1,582.8	513.9	11.1	3,369.0	0.0	0.0	**6,737.9**
Average	**0.0**	**0.0**	**5.1**	**16.0**	**576.4**	**1,340.7**	**1,748.2**	**850.5**	**306.7**	**130.9**	**0.0**	**0.0**	**4,974.5**
Average[1]	**0.0**	**0.0**	**0.0**	**0.1**	**3.1**	**7.3**	**9.6**	**4.6**	**1.7**	**0.7**	**0.0**	**0.0**	**27.2**
Average[2002]	**0.0**	**0.0**	**0.0**	**0.0**	**2.7**	**3.6**	**0.0**	**0.1**	**0.6**	**1.3**	**0.0**	**0.0**	**8.3**

Notes:

[1]average diversion per share, total shares = 183

[2002]average diversion per share during 2002 drought year

tabulation includes only river water applied to irrigation pending futher information from water commissioner.

data taken from the Raw Water Master Plan by Clear Water Solutions, Inc. (August 2007)

FIGURE D2

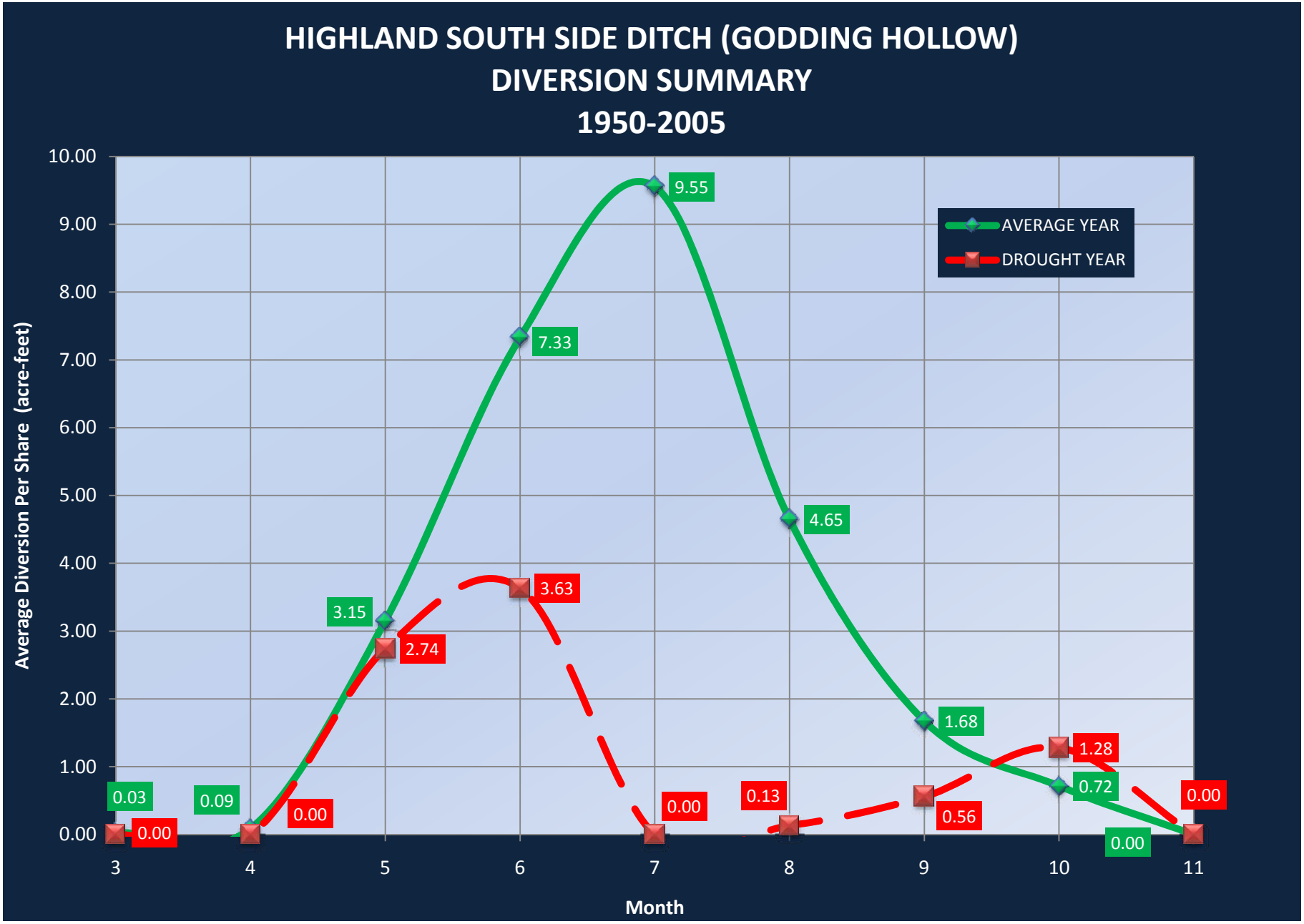
HIGHLAND SOUTH SIDE DITCH (GODDING HOLLOW)
DIVERSION SUMMARY
1950-2005
Average Diversion Per Share (acre-feet)
10.00
9.00
8.00
7.00
6.00
5.00
4.00
3.00
2.00
1.00
0.00
3
4
5
6
7
8
9
10
11
Month
AVERAGE YEAR
DROUGHT YEAR
0.03
0.00
0.09
0.00
3.15
2.74
7.33
3.63
9.55
0.00
4.65
0.13
1.68
0.56
0.72
1.28
0.00
0.00

TABLE D3
LOWER BOULDER DITCH
DIVERSION SUMMARY
1950 - 2005

Year	Monthly Irrigation Diversions												Total
	January 1 (acre-ft)	February 2 (acre-ft)	March 3 (acre-ft)	April 4 (acre-ft)	May 5 (acre-ft)	June 6 (acre-ft)	July 7 (acre-ft)	August 8 (acre-ft)	September 9 (acre-ft)	October 10 (acre-ft)	November 11 (acre-ft)	December 12 (acre-ft)	(acre-ft)
1950	0.0	0.0	0.0	937.2	1,971.6	4,085.0	2,159.0	1,537.2	1,487.6	1,061.2	35.7	0.0	**13,274.5**
1951	0.0	0.0	0.0	0.0	2,842.4	4,453.0	4,097.9	1,541.2	1,408.3	138.8	0.0	0.0	**14,481.6**
1952	0.0	0.0	0.0	0.0	1,204.0	5,329.7	3,251.0	1,273.4	0.0	0.0	0.0	0.0	**11,058.1**
1953	0.0	0.0	0.0	39.7	2,455.6	4,607.7	2,456.6	1,729.6	1,428.1	922.3	0.0	0.0	**13,639.6**
1954	0.0	0.0	0.0	871.7	1,797.1	1,492.6	1,542.2	1,525.3	1,376.5	299.5	0.0	0.0	**8,904.9**
1955	0.0	0.0	0.0	767.6	1,816.9	4,024.5	1,626.5	1,655.2	1,449.9	0.0	0.0	0.0	**11,340.6**
1956	0.0	0.0	0.0	454.2	3,606.0	5,667.9	1,812.9	1,900.2	1,455.9	1,449.9	39.7	0.0	**16,386.7**
1957	0.0	0.0	0.0	0.0	0.0	2,598.4	4,359.7	2,324.7	1,234.7	297.5	0.0	0.0	**10,815.0**
1958	0.0	0.0	0.0	47.6	174.5	3,655.6	1,797.1	1,537.2	1,330.9	117.0	0.0	0.0	**8,659.9**
1959	0.0	0.0	0.0	0.0	1,237.7	4,570.0	2,771.9	1,611.6	1,332.9	0.0	0.0	0.0	**11,524.1**
1960	0.0	0.0	0.0	480.0	313.4	4,407.3	3,187.5	1,570.9	1,487.6	785.5	0.0	0.0	**12,232.2**
1961	0.0	0.0	0.0	0.0	467.1	1,485.6	2,215.6	1,690.9	910.4	0.0	0.0	0.0	**6,769.6**
1962	0.0	0.0	0.0	220.2	3,713.1	2,703.5	4,620.6	1,575.9	1,465.8	251.9	0.0	0.0	**14,551.0**
1963	0.0	0.0	0.0	793.4	2,171.9	2,615.2	1,577.9	1,579.9	1,673.1	603.0	0.0	0.0	**11,014.4**
1964	0.0	0.0	0.0	119.0	2,590.5	2,459.5	1,878.4	1,537.2	1,487.6	1,219.9	620.8	0.0	**11,912.9**
1965	0.0	0.0	0.0	426.5	2,464.5	2,163.0	4,354.8	3,009.0	1,365.6	0.0	0.0	0.0	**13,783.4**
1966	0.0	0.0	0.0	419.5	1,730.6	2,158.0	1,611.6	1,526.3	1,487.6	119.0	0.0	0.0	**9,052.6**
1967	0.0	0.0	0.0	0.0	1,882.3	580.2	1,017.5	1,537.2	1,487.6	549.4	0.0	0.0	**7,054.2**
1968	0.0	0.0	0.0	0.0	1,328.0	5,291.0	2,488.3	1,930.9	1,487.6	773.6	0.0	0.0	**13,299.4**
1969	0.0	0.0	0.0	462.2	1,630.4	1,802.0	3,942.2	1,658.2	1,505.5	420.5	0.0	0.0	**11,421.0**
1970	0.0	0.0	0.0	0.0	2,704.5	1,910.1	4,349.8	1,581.8	1,428.1	0.0	0.0	0.0	**11,974.3**
1971	0.0	0.0	0.0	0.0	501.8	5,028.6	5,712.5	1,736.6	793.4	0.0	0.0	0.0	**13,772.9**
1972	0.0	0.0	0.0	208.3	2,498.4	3,814.3	1,897.2	1,571.9	684.3	0.0	0.0	0.0	**10,674.4**
1973	0.0	0.0	0.0	0.0	119.0	4,034.4	5,408.0	1,910.1	1,150.4	0.0	0.0	0.0	**12,621.9**

TABLE D3
LOWER BOULDER DITCH
DIVERSION SUMMARY
1950 - 2005

Year	Monthly Irrigation Diversions												Total
	January 1 (acre-ft)	February 2 (acre-ft)	March 3 (acre-ft)	April 4 (acre-ft)	May 5 (acre-ft)	June 6 (acre-ft)	July 7 (acre-ft)	August 8 (acre-ft)	September 9 (acre-ft)	October 10 (acre-ft)	November 11 (acre-ft)	December 12 (acre-ft)	(acre-ft)
1974	0.0	0.0	0.0	0.0	2,354.4	4,016.6	3,300.5	1,658.2	1,289.3	0.0	0.0	0.0	**12,619.0**
1975	0.0	0.0	0.0	0.0	1,678.0	2,598.4	6,049.7	1,880.4	1,457.9	79.3	0.0	0.0	**13,743.7**
1976	0.0	0.0	0.0	204.3	2,007.3	3,996.8	2,025.2	2,120.4	1,378.5	0.0	0.0	0.0	**11,732.5**
1977	0.0	0.0	0.0	0.0	1,910.1	4,121.7	1,701.8	1,803.0	1,487.6	148.8	0.0	0.0	**11,173.0**
1978	0.0	0.0	0.0	495.9	543.5	3,695.3	6,289.7	1,949.8	1,612.6	0.0	0.0	0.0	**14,586.8**
1979	0.0	0.0	0.0	0.0	293.6	2,826.5	4,643.4	1,755.4	1,354.7	218.2	0.0	0.0	**11,091.8**
1980	0.0	0.0	0.0	0.0	0.0	4,633.5	5,200.7	1,707.8	1,517.4	39.7	0.0	0.0	**13,099.1**
1981	0.0	0.0	0.0	0.0	1,854.6	2,294.9	1,989.5	1,537.2	1,527.3	148.8	0.0	0.0	**9,352.3**
1982	0.0	0.0	0.0	543.5	1,487.6	2,632.1	4,962.7	3,530.6	1,396.4	0.0	0.0	0.0	**14,552.9**
1983	0.0	0.0	0.0	0.0	0.0	1,338.9	4,819.9	4,286.3	2,037.1	396.7	0.0	0.0	**12,878.9**
1984	0.0	0.0	0.0	0.0	993.7	2,830.5	7,412.3	3,459.2	1,487.6	446.3	0.0	0.0	**16,629.6**
1985	0.0	0.0	0.0	261.8	1,989.5	5,666.9	3,759.7	1,824.0	1,487.6	644.6	0.0	0.0	**15,634.1**
1986	0.0	0.0	0.0	0.0	3,026.8	3,249.6	7,240.4	1,537.2	1,547.1	545.5	0.0	0.0	**17,146.6**
1987	0.0	0.0	0.0	0.0	2,011.3	3,485.0	2,956.8	2,081.7	1,426.1	71.4	0.0	0.0	**12,032.3**
1988	0.0	0.0	0.0	0.0	2,252.0	3,826.2	3,284.7	1,448.4	1,330.5	0.0	0.0	0.0	**12,141.8**
1989	0.0	0.0	0.0	472.5	2,976.6	3,174.6	1,906.1	1,462.8	963.7	0.0	0.0	0.0	**10,956.3**
1990	0.0	0.0	0.0	0.0	2,814.6	4,614.7	4,703.9	1,445.3	1,410.3	158.7	0.0	0.0	**15,147.5**
1991	0.0	0.0	0.0	815.2	2,923.9	2,760.6	2,046.4	1,357.2	1,056.6	0.0	0.0	0.0	**10,959.9**
1992	0.0	0.0	0.0	671.1	3,538.7	2,321.7	2,125.9	1,655.2	1,272.1	266.1	0.0	0.0	**11,850.8**
1993	0.0	0.0	0.0	218.2	2,671.4	3,619.4	5,047.8	1,506.5	1,055.2	0.0	0.0	0.0	**14,118.5**
1994	0.0	0.0	0.0	277.7	3,092.5	4,928.6	1,338.3	1,330.4	1,174.0	205.7	0.0	0.0	**12,347.2**
1995	0.0	0.0	0.0	286.9	724.0	717.7	4,185.7	4,117.4	1,032.1	37.1	0.0	0.0	**11,100.9**
1996	0.0	0.0	0.0	314.9	4,748.2	2,900.5	5,204.7	1,561.2	880.5	0.0	0.0	0.0	**15,610.0**
1997	0.0	0.0	0.0	0.0	2,349.9	1,349.3	5,133.3	1,969.0	1,124.4	86.0	0.0	0.0	**12,011.9**

TABLE D3
LOWER BOULDER DITCH
DIVERSION SUMMARY
1950 - 2005

Year	Monthly Irrigation Diversions												Total
	January 1 (acre-ft)	February 2 (acre-ft)	March 3 (acre-ft)	April 4 (acre-ft)	May 5 (acre-ft)	June 6 (acre-ft)	July 7 (acre-ft)	August 8 (acre-ft)	September 9 (acre-ft)	October 10 (acre-ft)	November 11 (acre-ft)	December 12 (acre-ft)	(acre-ft)
1998	0.0	0.0	0.0	0.0	2,946.7	3,964.2	4,190.0	2,266.6	1,252.9	475.1	0.0	0.0	**15,095.5**
1999	0.0	0.0	0.0	183.0	954.2	2,857.8	4,705.5	2,434.7	1,340.0	163.2	0.0	0.0	**12,638.4**
2000	0.0	0.0	0.0	651.0	3,294.9	4,322.0	1,892.9	1,209.1	1,216.5	947.9	0.0	0.0	**13,534.3**
2001	0.0	0.0	0.0	0.0	1,125.2	3,712.1	2,621.6	1,892.5	1,306.7	756.4	0.0	0.0	**11,414.5**
2002	0.0	0.0	0.0	1,456.5	1,565.0	1,903.5	1,174.6	1,193.7	1,133.0	1,094.1	0.0	0.0	**9,520.4**
2003	0.0	0.0	0.0	486.2	1,498.5	2,898.9	3,052.6	1,297.0	1,657.4	961.4	0.0	0.0	**11,852.0**
2004	0.0	0.0	0.0	1,021.1	2,751.9	2,625.6	2,242.3	1,947.8	1,257.7	1,060.7	0.0	0.0	**12,907.1**
2005	0.0	0.0	0.0	854.1	1,931.1	2,403.8	2,900.1	1,517.9	1,174.6	728.5	NC		**11,510.1**
Average	**0.0**	**0.0**	**0.0**	**276.1**	**1,884.5**	**3,271.9**	**3,397.2**	**1,853.5**	**1,313.7**	**333.7**	**12.7**	**0.0**	**12,343.2**
Average[P]	**0.0**	**0.0**	**0.0**	**0.5**	**3.5**	**6.1**	**6.4**	**3.5**	**2.5**	**0.6**	**0.0**	**0.0**	**23.1**
Average[C]	**0.0**	**0.0**	**0.0**	**0.2**	**1.2**	**2.0**	**2.1**	**1.2**	**0.8**	**0.2**	**0.0**	**0.0**	**7.7**
Average[2002P]	**0.0**	**0.0**	**0.0**	**2.7**	**2.9**	**3.6**	**2.2**	**2.2**	**2.1**	**2.1**	**0.0**	**0.0**	**17.9**
Average[2002C]	**0.0**	**0.0**	**0.0**	**0.9**	**1.0**	**1.2**	**0.7**	**0.7**	**0.7**	**0.7**	**0.0**	**0.0**	**6.0**

Notes:

[P]average diversion per share, total shares = 200 preferred

[C]average diversion per share, total shares = 200 common

[2002P]average diversion per preferred share during 2002 drought year

[2002C]average diversion per common share during 2002 drought year

tabulated values are river water to irrigation only pending futher information.

data taken from the Raw Water Master Plan by Clear Water Solutions, Inc. (August 2007)

FIGURE D3

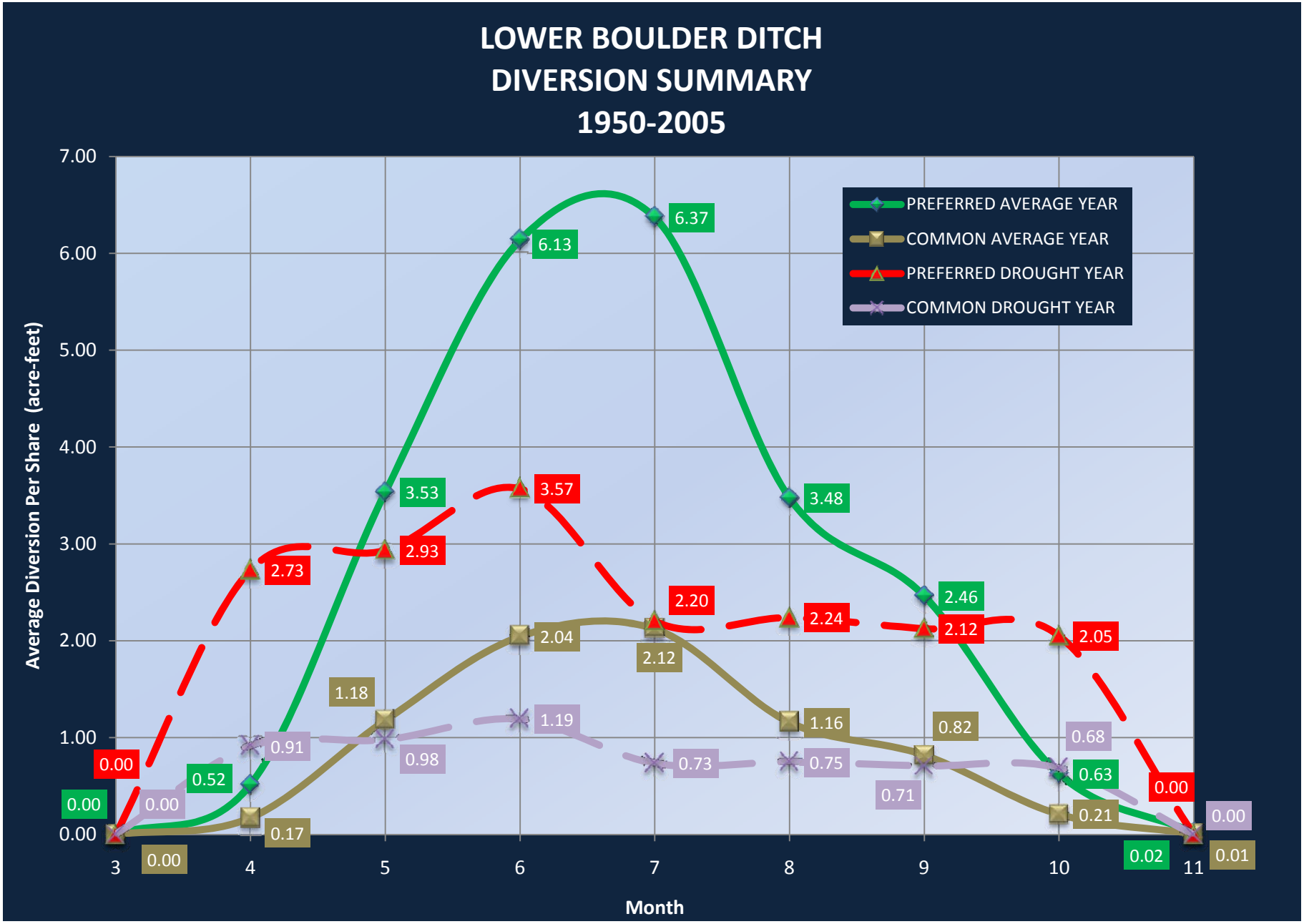
LOWER BOULDER DITCH
DIVERSION SUMMARY
1950-2005
Average Diversion Per Share (acre-feet)
Month
PREFERRED AVERAGE YEAR
COMMON AVERAGE YEAR
PREFERRED DROUGHT YEAR
COMMON DROUGHT YEAR
7.00
6.00
5.00
4.00
3.00
2.00
1.00
0.00
3
4
5
6
7
8
9
10
11
0.00
0.52
3.53
6.13
6.37
3.48
2.46
0.63
0.02
0.00
0.00
0.17
1.18
2.04
2.12
1.16
0.82
0.21
0.01
0.00
0.91
0.98
1.19
0.73
0.75
0.71
0.68
0.00
0.00
2.73
2.93
3.57
2.20
2.24
2.12
2.05
0.00

TABLE D4
RURAL DITCH
DIVERSION SUMMARY
1950 - 2005

Year	Monthly Irrigation Diversions												Total
	January 1 (acre-ft)	February 2 (acre-ft)	March 3 (acre-ft)	April 4 (acre-ft)	May 5 (acre-ft)	June 6 (acre-ft)	July 7 (acre-ft)	August 8 (acre-ft)	September 9 (acre-ft)	October 10 (acre-ft)	November 11 (acre-ft)	December 12 (acre-ft)	(acre-ft)
1950	0.0	0.0	0.0	0.0	634.0	1,188.0	1,146.0	350.0	512.0	152.0	0.0	0.0	**3,982.0**
1951	0.0	0.0	0.0	0.0	512.0	1,206.0	1,748.0	944.0	840.0	100.0	0.0	0.0	**5,350.0**
1952	0.0	0.0	0.0	0.0	0.0	1,402.0	1,500.0	1,562.0	570.0	146.0	0.0	0.0	**5,180.0**
1953	0.0	0.0	0.0	0.0	860.0	1,516.0	1,220.0	768.0	460.0	0.0	0.0	0.0	**4,824.0**
1954	0.0	0.0	0.0	88.0	1,370.0	1,474.0	1,084.0	164.0	0.0	0.0	0.0	0.0	**4,180.0**
1955	0.0	0.0	0.0	96.0	1,602.0	1,046.0	1,480.0	690.0	146.0	200.0	0.0	0.0	**5,260.0**
1956	0.0	0.0	0.0	0.0	1,670.0	1,532.0	1,756.0	1,164.0	102.0	148.0	0.0	0.0	**6,372.0**
1957	0.0	0.0	0.0	0.0	0.0	988.0	2,596.0	906.0	558.0	768.0	0.0	0.0	**5,816.0**
1958	0.0	0.0	0.0	0.0	0.0	872.0	1,242.0	1,046.0	552.0	822.0	0.0	0.0	**4,534.0**
1959	0.0	0.0	0.0	0.0	494.0	1,874.0	1,118.0	1,016.0	756.0	408.0	0.0	0.0	**5,666.0**
1960	0.0	0.0	0.0	0.0	120.0	1,862.0	1,322.0	1,126.0	882.0	290.0	0.0	0.0	**5,602.0**
1961	0.0	0.0	0.0	0.0	0.0	906.0	1,272.0	1,416.0	146.0	0.0	0.0	0.0	**3,740.0**
1962	0.0	0.0	0.0	0.0	996.0	1,348.0	1,540.0	1,050.0	256.0	122.0	0.0	0.0	**5,312.0**
1963	0.0	0.0	0.0	164.0	1,560.0	520.0	1,056.0	946.0	534.0	72.0	0.0	0.0	**4,852.0**
1964	0.0	0.0	0.0	0.0	1,670.0	292.0	1,774.0	696.0	154.0	0.0	0.0	0.0	**4,586.0**
1965	0.0	0.0	0.0	0.0	982.0	0.0	1,158.0	596.0	138.0	0.0	0.0	0.0	**2,874.0**
1966	0.0	0.0	0.0	0.0	936.0	1,270.0	1,588.0	574.0	96.0	0.0	0.0	0.0	**4,464.0**
1967	0.0	0.0	0.0	120.0	274.0	258.0	202.0	1,304.0	194.0	176.0	0.0	0.0	**2,528.0**
1968	0.0	0.0	0.0	0.0	780.0	1,630.0	2,490.0	754.0	84.0	0.0	0.0	0.0	**5,738.0**
1969	0.0	0.0	0.0	40.0	410.0	60.0	1,436.0	1,176.0	356.0	0.0	0.0	0.0	**3,478.0**
1970	0.0	0.0	0.0	0.0	1,004.0	590.0	1,986.0	1,422.0	352.0	0.0	0.0	0.0	**5,354.0**
1971	0.0	0.0	0.0	0.0	350.0	2,438.0	2,740.0	1,508.0	704.0	0.0	0.0	0.0	**7,740.0**
1972	0.0	0.0	0.0	24.0	1,256.0	1,692.0	1,994.0	1,168.0	870.0	0.0	0.0	0.0	**7,004.0**
1973	0.0	0.0	0.0	0.0	0.0	1,046.0	2,094.0	1,090.0	142.0	0.0	0.0	0.0	**4,372.0**

TABLE D4
RURAL DITCH
DIVERSION SUMMARY
1950 - 2005

Year	Monthly Irrigation Diversions												Total
	January 1 (acre-ft)	February 2 (acre-ft)	March 3 (acre-ft)	April 4 (acre-ft)	May 5 (acre-ft)	June 6 (acre-ft)	July 7 (acre-ft)	August 8 (acre-ft)	September 9 (acre-ft)	October 10 (acre-ft)	November 11 (acre-ft)	December 12 (acre-ft)	(acre-ft)
1974	0.0	0.0	0.0	0.0	1,175.0	1,497.0	2,471.0	1,152.0	309.0	0.0	0.0	0.0	**6,604.0**
1975	0.0	0.0	0.0	0.0	893.0	1,384.0	2,194.0	1,447.0	883.0	0.0	0.0	0.0	**6,801.0**
1976	0.0	0.0	0.0	93.0	849.0	1,641.0	1,970.0	1,176.0	828.0	20.0	0.0	0.0	**6,577.0**
1977	0.0	0.0	0.0	0.0	712.8	1,520.6	1,019.7	865.3	342.5	91.1	0.0	0.0	**4,552.0**
1978	0.0	0.0	0.0	0.0	0.0	948.4	2,415.6	1,289.0	545.5	544.5	0.0	0.0	**5,743.0**
1979	0.0	0.0	0.0	0.0	0.0	627.7	2,702.7	1,320.7	974.2	130.7	0.0	0.0	**5,756.0**
1980	0.0	0.0	0.0	0.0	0.0	1,498.9	2,480.9	1,296.9	558.4	0.0	0.0	0.0	**5,835.1**
1981	0.0	0.0	0.0	0.0	524.7	1,289.0	1,817.6	687.1	396.0	0.0	0.0	0.0	**4,714.4**
1982	0.0	0.0	0.0	483.1	643.5	1,354.3	2,203.7	1,718.6	299.0	0.0	0.0	0.0	**6,702.2**
1983	0.0	0.0	0.0	0.0	0.0	431.6	1,827.5	1,560.2	671.2	128.7	0.0	0.0	**4,619.2**
1984	0.0	0.0	0.0	0.0	914.8	1,586.0	2,578.0	2,053.3	1,011.8	0.0	0.0	0.0	**8,143.9**
1985	0.0	0.0	0.0	0.0	316.8	1,700.8	1,578.1	1,190.0	348.5	0.0	0.0	0.0	**5,134.2**
1986	0.0	0.0	0.0	0.0	412.6	398.7	2,066.8	918.4	414.6	0.0	0.0	0.0	**4,211.0**
1987	0.0	0.0	0.0	0.0	266.8	893.6	1,236.9	692.2	63.5	0.0	0.0	0.0	**3,153.0**
1988	0.0	0.0	0.0	0.0	298.7	2,037.5	1,987.5	1,468.0	210.5	0.0	0.0	0.0	**6,002.2**
1989	0.0	0.0	0.0	0.0	1,546.2	938.6	2,402.7	1,751.9	23.7	0.0	0.0	0.0	**6,663.2**
1990	0.0	0.0	0.0	0.0	812.2	1,114.6	1,380.7	1,394.8	841.7	0.0	0.0	0.0	**5,544.0**
1991	0.0	0.0	0.0	0.0	1,093.1	1,765.3	2,782.9	2,313.6	364.9	0.0	0.0	0.0	**8,319.7**
1992	0.0	0.0	0.0	0.0	885.4	1,301.8	2,259.7	1,261.0	0.0	0.0	0.0	0.0	**5,707.9**
1993	0.0	0.0	0.0	0.0	1,609.0	1,191.0	1,669.3	972.3	331.2	0.0	0.0	0.0	**5,772.6**
1994	0.0	0.0	0.0	0.0	665.0	1,502.0	1,967.0	1,736.0	1,052.0	373.0	0.0	0.0	**7,295.0**
1995	0.0	0.0	0.0	0.0	0.0	0.0	1,603.0	2,446.0	953.0	0.0	0.0	0.0	**5,002.0**
1996	0.0	0.0	0.0	0.0	1,397.0	1,092.0	1,409.0	1,274.0	301.0	0.0	0.0	0.0	**5,473.0**
1997	0.0	0.0	0.0	0.0	804.0	630.0	1,812.0	1,053.0	1,028.0	0.0	0.0	0.0	**5,327.0**

TABLE D4
RURAL DITCH
DIVERSION SUMMARY
1950 - 2005

Year	Monthly Irrigation Diversions												Total
	January 1 (acre-ft)	February 2 (acre-ft)	March 3 (acre-ft)	April 4 (acre-ft)	May 5 (acre-ft)	June 6 (acre-ft)	July 7 (acre-ft)	August 8 (acre-ft)	September 9 (acre-ft)	October 10 (acre-ft)	November 11 (acre-ft)	December 12 (acre-ft)	(acre-ft)
1998	0.0	0.0	0.0	203.0	1,954.0	1,838.0	1,919.0	1,540.0	1,321.0	0.0	0.0	0.0	**8,775.0**
1999	0.0	0.0	0.0	197.7	598.5	1,144.2	1,995.1	1,238.7	868.2	499.9	0.0	0.0	**6,542.3**
2000	0.0	0.0	0.0	97.2	1,541.8	1,815.8	1,628.6	1,806.8	1,539.7	0.0	0.0	0.0	**8,429.9**
2001	0.0	0.0	0.0	0.0	434.2	1,571.6	1,649.9	1,266.9	1,162.3	361.0	0.0	0.0	**6,445.9**
2002	0.0	0.0	0.0	318.2	951.5	1,006.9	1,115.3	439.5	340.9	868.7	0.0	0.0	**5,041.0**
2003	0.0	0.0	0.0	78.6	1,060.0	1,228.2	1,960.9	1,603.2	2,138.8	909.8	0.0	0.0	**8,979.5**
2004	0.0	0.0	0.0	750.6	1,451.3	1,658.7	2,106.8	1,679.8	1,714.5	123.9	0.0	0.0	**9,485.6**
2005	0.0	0.0	0.0	0.0	1,183.7	1,422.7	1,298.2	1,130.9	1,100.9	415.2	NC		**6,551.6**
Average	**0.0**	**0.0**	**0.0**	**49.2**	**758.5**	**1,197.2**	**1,768.8**	**1,199.6**	**577.5**	**140.5**	**0.0**	**0.0**	**5,691.3**
Average[1]	**0.0**	**0.0**	**0.0**	**1.0**	**15.2**	**23.9**	**35.4**	**24.0**	**11.6**	**2.8**	**0.0**	**0.0**	**113.8**
Average[2002]	**0.0**	**0.0**	**0.0**	**6.4**	**19.0**	**20.1**	**22.3**	**8.8**	**6.8**	**17.4**	**0.0**	**0.0**	**100.8**

Notes:

[1]average diversion per share, total shares = 50

[2002]average diversion per share during 2002 drought year

data taken from the Raw Water Master Plan by Clear Water Solutions, Inc. (August 2007)

FIGURE D4

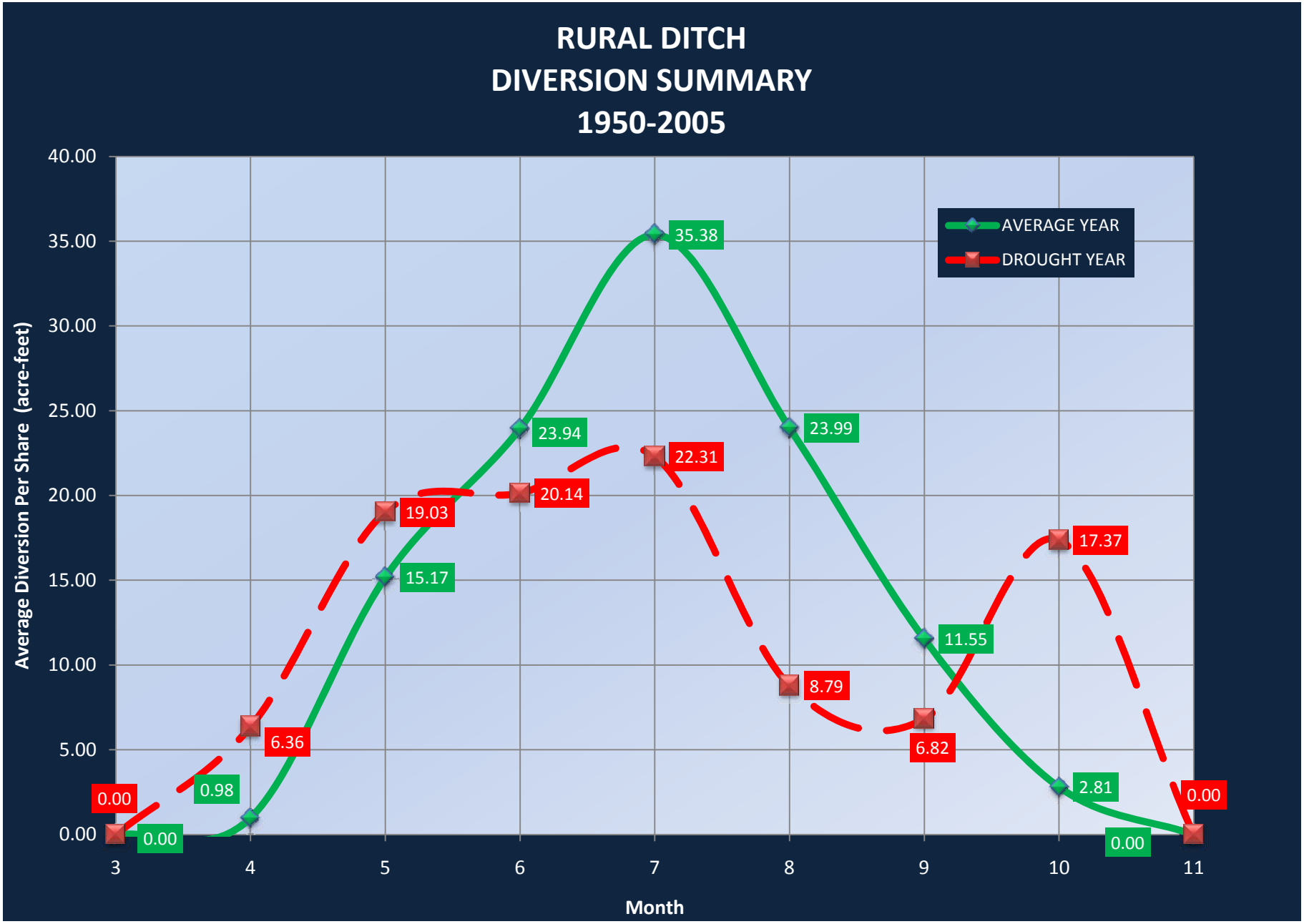
RURAL DITCH
DIVERSION SUMMARY
1950-2005
Average Diversion Per Share (acre-feet)
40.00
35.00
30.00
25.00
20.00
15.00
10.00
5.00
0.00
3
4
5
6
7
8
9
10
11
Month
AVERAGE YEAR
DROUGHT YEAR
0.00
0.98
15.17
23.94
35.38
23.99
11.55
2.81
0.00
0.00
6.36
19.03
20.14
22.31
8.79
6.82
17.37
0.00

TABLE D5
IRRIGATION DITCH
DIVERSION SUMMARY

Diversions Per Share	Monthly Irrigation Diversions												Total Per Share
	January (acre-ft)	February (acre-ft)	March (acre-ft)	April (acre-ft)	May (acre-ft)	June (acre-ft)	July (acre-ft)	August (acre-ft)	September (acre-ft)	October (acre-ft)	November (acre-ft)	December (acre-ft)	(acre-ft)
Average[1]	0.00	0.00	0.00	0.03	0.14	0.38	0.37	0.17	0.13	0.03	0.00	0.00	**1.3**
Average[2002]	0.00	0.00	0.00	0.19	0.18	0.25	0.12	0.11	0.10	0.10	0.00	0.00	**1.1**
Average[1]	0.00	0.00	0.03	0.09	3.15	7.33	9.55	4.65	1.68	0.72	0.00	0.00	**27.2**
Average[2002]	0.00	0.00	0.00	0.00	2.74	3.63	0.00	0.13	0.56	1.28	0.00	0.00	**8.3**
Average[P]	0.00	0.00	0.00	0.52	3.53	6.13	6.37	3.48	2.46	0.63	0.02	0.00	**23.1**
Average[C]	0.00	0.00	0.00	0.17	1.18	2.04	2.12	1.16	0.82	0.21	0.01	0.00	**7.7**
Average[2002P]	0.00	0.00	0.00	2.73	2.93	3.57	2.20	2.24	2.12	2.05	0.00	0.00	**17.9**
Average[2002C]	0.00	0.00	0.00	0.91	0.98	1.19	0.73	0.75	0.71	0.68	0.00	0.00	**6.0**
Average[1]	0.00	0.00	0.00	0.98	15.17	23.94	35.38	23.99	11.55	2.81	0.00	0.00	**113.8**
Average[2002]	0.00	0.00	0.00	6.36	19.03	20.14	22.31	8.79	6.82	17.37	0.00	0.00	**100.8**

Notes:

COAL RIDGE DITCH
HIGHLAND SOUTH SIDE DITCH (GODDING HOLLOW)
LOWER BOULDER DITCH
RURAL DITCH

TABLE D6
IRRIGATION DITCHCOMPARISON
COAL RIDGE DITCH VS. LOWER BOULDER DITCH

Diversions Per Share	Monthly Irrigation Diversions												Total Per Share (acre-ft)
	January % of Total	February % of Total	March % of Total	April % of Total	May % of Total	June % of Total	July % of Total	August % of Total	September % of Total	October % of Total	November % of Total	December % of Total	
Average[1]	0.00	0.00	0.00	0.02	0.11	0.30	0.30	0.14	0.10	0.02	0.00	0.00	**1.3**
Average[2002]	0.00	0.00	0.00	0.18	0.17	0.24	0.11	0.10	0.10	0.10	0.00	0.00	**1.1**
Average[P]	0.00	0.00	0.00	0.02	0.15	0.27	0.28	0.15	0.11	0.03	0.00	0.00	**23.1**
Average[C]	0.00	0.00	0.00	0.02	0.15	0.27	0.28	0.15	0.11	0.03	0.00	0.00	**7.7**
Average[2002P]	0.00	0.00	0.00	0.15	0.16	0.20	0.12	0.13	0.12	0.11	0.00	0.00	**17.9**
Average[2002C]	0.00	0.00	0.00	0.15	0.16	0.20	0.12	0.13	0.12	0.11	0.00	0.00	**6.0**

Notes:

COAL RIDGE DITCH
LOWER BOULDER DITCH

Appendix E: Storage Calculations

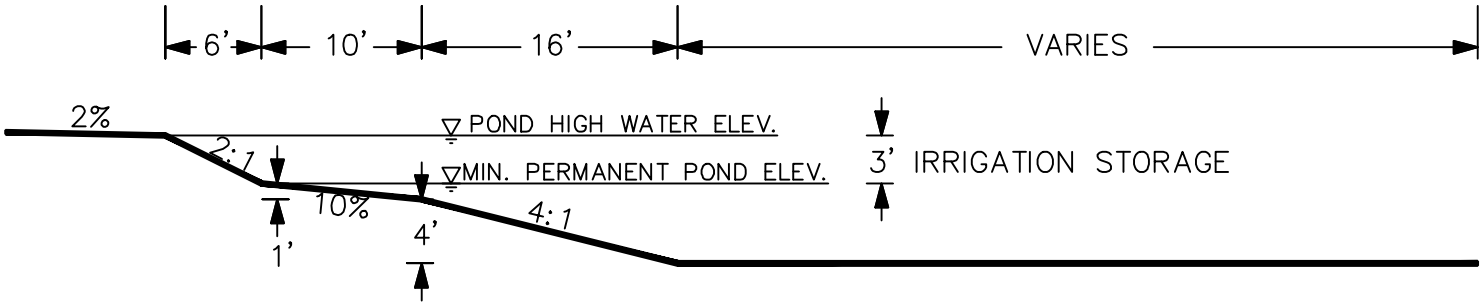

TOWN OF FIRESTONE
RAW WATER IRRIGATION SYSTEM MASTER PLAN

FIGURE E1 - CENTRAL PARK IRRIGATION RESERVOIR CONCEPTUAL CROSS-SECTION

FILENAME: CENTRAL PARK POND FIGURES
DESIGNER: C.E.M.
CHECKER: D.B.L.
JOB NO.: 0000-00-00
SCALE: N.T.S.
DATE: DECEMBER 2000

SHEET NO.: 1 OF 1

CCG COLORADO CIVIL GROUP, INC.
ENGINEERING CONSULTANTS

TABLE E1
FIRESTONE CENTRAL PARK
IRRIGATION RESERVOIR
STAGE-STORAGE DATA

Irrigation Pond Data						Incremental Storage	
Elevation[1] (feet)	Depth[2] (feet)	Radius (feet)	Perimeter (feet)	Surface Area (ft^2)	Surface Area (acres)	(ft^3)	(acre-feet)[3]
4945	8.0	530.0	3,330	882,473	20.26		
						879,150	**20.18**
4944	7.0	528.0	3,318	875,826	20.11		
						872,515	**20.03**
4943	6.0	526.0	3,305	869,203	19.95		
						865,905	**19.88**
4942	5.0	524.0	3,292	862,606	19.80		
						846,301	19.43
4941	4.0	514.0	3,230	829,996	19.05		
						823,562	18.91
4940	3.0	510.0	3,204	817,128	18.76		
						810,745	18.61
4939	2.0	506.0	3,179	804,361	18.47		
						798,027	18.32
4938	1.0	502.0	3,154	791,694	18.17		
						785,411	18.03
4937	0.0	498.0	3,129	779,128	17.89		

Notes:

[1]water surface elevations are approximate

[2]water below 5.0 feet is not assumed for irrigation storage

[3]total irrigation storage = 60.09 acre-feet

TABLE E2
CENTRAL PARK IRRIGATION RESERVOIR
PRIORITY 1 PARKS
AVERAGE YEAR SCENARIO

Description	Units	Monthly Totals												Total
		January 1	February 2	March 3	April 4	May 5	June 6	July 7	August 8	September 9	October 10	November 11	December 12	
Evaporation	(acre-feet)	2.08	2.42	3.81	6.23	8.31	10.04	10.38	9.34	6.92	4.85	2.77	2.08	**69.22**
Irrigation Demand (Priority 1)	(acre-feet)	0.00	0.00	0.00	17.64	41.42	51.79	57.79	46.07	34.93	20.49	0.00	0.00	**270.13**
Ditch Transfer (Coalridge)	(acre-feet)	0.00	0.00	0.00	9.06	42.28	114.76	111.74	51.34	39.26	9.06	0.00	0.00	**377.50**
Ditch Transfer (Highland South Side)	(acre-feet)	0.00	0.00	0.00	0.00	0.00	0.00	0.00	0.00	0.00	0.00	0.00	0.00	**0.00**
Ditch Transfer (Lower Boulder, P)	(acre-feet)	0.00	0.00	0.00	0.00	0.00	0.00	0.00	0.00	0.00	0.00	0.00	0.00	**0.00**
Ditch Transfer (Lower Boulder, C)	(acre-feet)	0.00	0.00	0.00	0.00	0.00	0.00	0.00	0.00	0.00	0.00	0.00	0.00	**0.00**
Ditch Transfer (Rural)	(acre-feet)	0.00	0.00	0.00	0.00	0.00	0.00	0.00	0.00	0.00	0.00	0.00	0.00	**0.00**
Net Loss/Gain	(acre-feet)	-2.08	-2.42	-3.81	-14.81	-7.45	52.93	43.57	-4.07	-2.59	-16.27	-2.77	-2.08	
Storage Reservoir Volume	(acre-feet)	30.2	27.8	24.0	9.2	1.7	60.1	60.1	56.0	53.4	37.2	34.4	32.3	
Top Irrigation Depth	(feet)	8	8	8	8	8	8	8	8	8	8	8	8	
Overall Pond Depth	(feet)	6.51	6.39	6.20	5.46	5.09	8.00	8.00	7.80	7.67	6.85	6.72	6.61	
Bottom Irrigation Depth	(feet)	5	5	5	5	5	5	5	5	5	5	5	5	

Volume Shortage (acre-feet) = -38.15

Notes:

Irrigation Reservoir Surface Area = 20.26
 # Irrigation Shares (CR) = 302
Irrigation Shares (HSS) = 0
Irrigation Shares (LB-P) = 0
Irrigation Shares (LB-C) = 0
Irrigation Shares (R) = 0

FIGURE E2

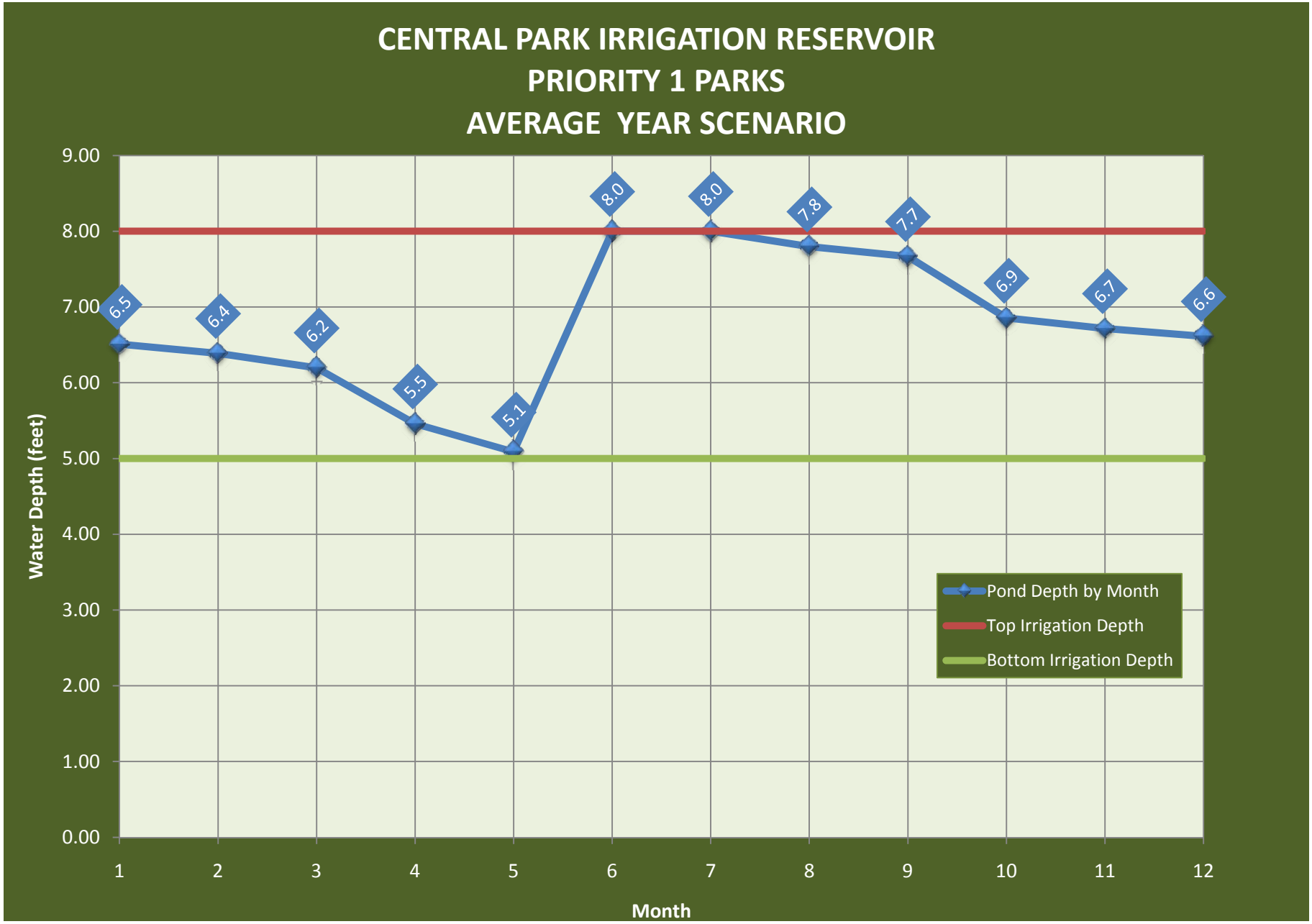
CENTRAL PARK IRRIGATION RESERVOIR
PRIORITY 1 PARKS
AVERAGE YEAR SCENARIO
Water Depth (feet)
9.00
8.00
7.00
6.00
5.00
4.00
3.00
2.00
1.00
0.00
1
2
3
4
5
6
7
8
9
10
11
12
Month
6.5
6.4
6.2
5.5
5.1
8.0
8.0
7.8
7.7
6.9
6.7
6.6
Pond Depth by Month
Top Irrigation Depth
Bottom Irrigation Depth

TABLE E3
CENTRAL PARK IRRIGATION RESERVOIR
PRIORITY 1 PARKS
DROUGHT YEAR SCENARIO

Description	Units	Monthly Totals												Total
		January 1	February 2	March 3	April 4	May 5	June 6	July 7	August 8	September 9	October 10	November 11	December 12	
Evaporation	(acre-feet)	2.08	2.42	3.81	6.23	8.31	10.04	10.38	9.34	6.92	4.85	2.77	2.08	**69.22**
Irrigation Demand (Priority 1)	(acre-feet)	0.00	0.00	0.00	44.80	35.20	59.02	72.66	55.27	37.19	17.42	0.00	0.00	**321.55**
Ditch Transfer (New Coal Ridge)	(acre-feet)	0.00	0.00	0.00	77.71	73.62	102.25	49.08	44.99	40.90	40.90	0.00	0.00	**429.45**
Ditch Transfer (Highland South Side)	(acre-feet)	0.00	0.00	0.00	0.00	0.00	0.00	0.00	0.00	0.00	0.00	0.00	0.00	**0.00**
Ditch Transfer (Lower Boulder, P)	(acre-feet)	0.00	0.00	0.00	0.00	0.00	0.00	0.00	0.00	0.00	0.00	0.00	0.00	**0.00**
Ditch Transfer (Lower Boulder, C)	(acre-feet)	0.00	0.00	0.00	0.00	0.00	0.00	0.00	0.00	0.00	0.00	0.00	0.00	**0.00**
Ditch Transfer (Rural)	(acre-feet)	0.00	0.00	0.00	0.00	0.00	0.00	0.00	0.00	0.00	0.00	0.00	0.00	**0.00**
Net Loss/Gain	(acre-feet)	-2.08	-2.42	-3.81	26.68	30.12	33.19	-33.96	-19.62	-3.21	18.63	-2.77	-2.08	
Storage Reservoir Volume	(acre-feet)	15.0	12.6	8.8	35.5	60.1	60.1	26.1	6.5	3.3	21.9	19.2	17.1	
Top Irrigation Depth	(feet)	8	8	8	8	8	8	8	8	8	8	8	8	
Overall Pond Depth	(feet)	5.75	5.63	5.44	6.77	8.00	8.00	6.30	5.32	5.16	6.09	5.96	5.85	
Bottom Irrigation Depth	(feet)	5	5	5	5	5	5	5	5	5	5	5	5	

Volume Shortage (acre-feet) = -38.68

Notes:

Irrigation Reservoir Surface Area = 20.26
 # Irrigation Shares (CR) = 409
Irrigation Shares (HSS) = 0
Irrigation Shares (LB-P) = 0
Irrigation Shares (LB-C) = 0
Irrigation Shares (R) = 0

FIGURE E3

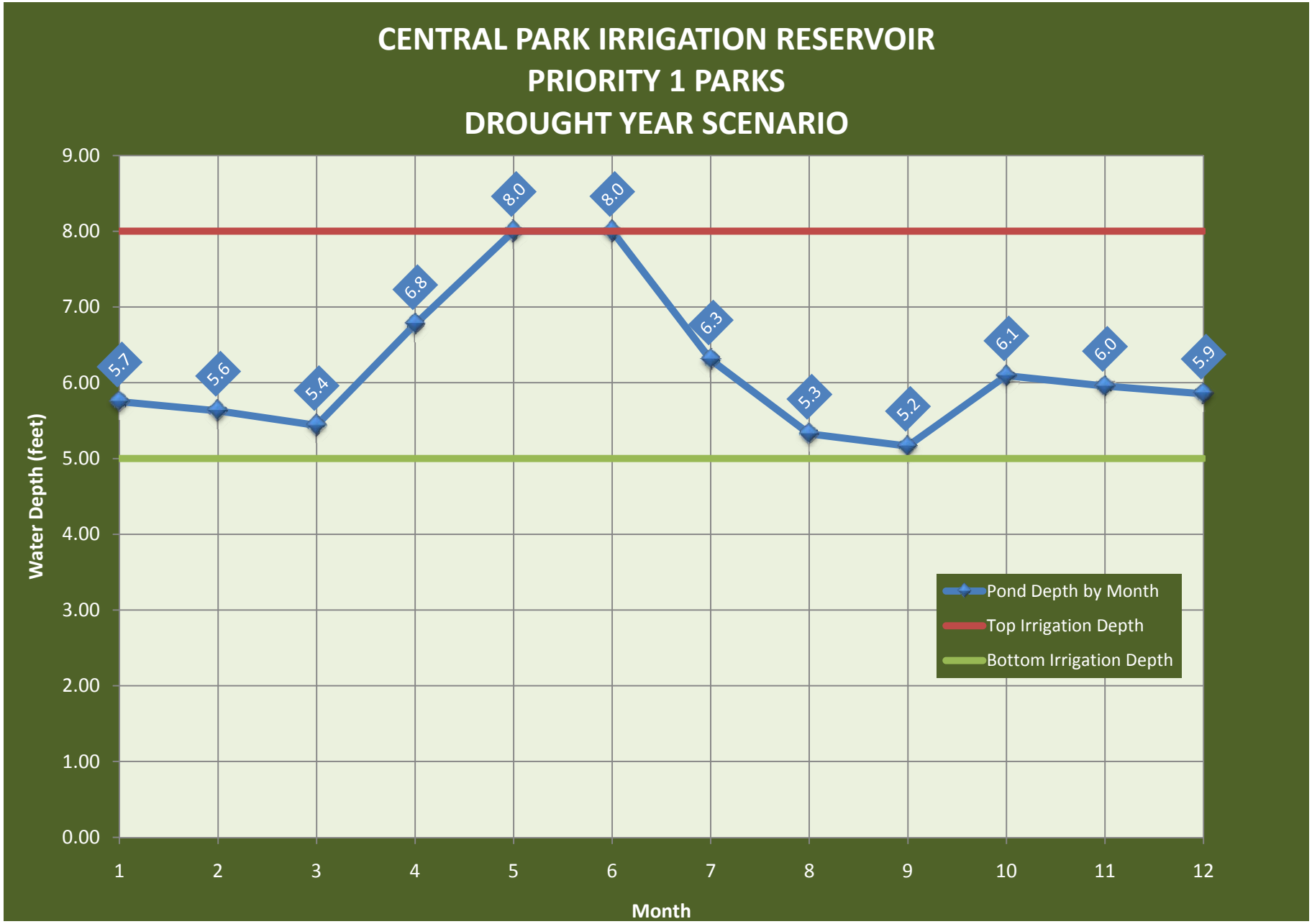
CENTRAL PARK IRRIGATION RESERVOIR
PRIORITY 1 PARKS
DROUGHT YEAR SCENARIO
Water Depth (feet)
9.00
8.00
7.00
6.00
5.00
4.00
3.00
2.00
1.00
0.00
1
2
3
4
5
6
7
8
9
10
11
12
Month
5.7
5.6
5.4
6.8
8.0
8.0
6.3
5.3
5.2
6.1
6.0
5.9
Pond Depth by Month
Top Irrigation Depth
Bottom Irrigation Depth

TABLE E4
CENTRAL PARK IRRIGATION RESERVOIR
PRIORITY 1-3 PARKS
AVERAGE YEAR SCENARIO

Storage Reservoir Volume	Units	Monthly Totals												Total
		January 1	February 2	March 3	April 4	May 5	June 6	July 7	August 8	September 9	October 10	November 11	December 12	
Evaporation	(acre-feet)	2.08	2.42	3.81	6.23	8.31	10.04	10.38	9.34	6.92	4.85	2.77	2.08	**69.22**
Irrigation Demand (Priority 1-3)	(acre-feet)	0.00	0.00	0.00	39.48	92.71	115.91	129.34	103.10	78.17	45.86	0.00	0.00	**604.58**
Ditch Transfer (New Coal Ridge)	(acre-feet)	0.00	0.00	0.00	26.37	123.06	334.02	325.23	149.43	114.27	26.37	0.00	0.00	**1098.75**
Ditch Transfer (Highland South Side)	(acre-feet)	0.00	0.00	0.00	0.00	0.00	0.00	0.00	0.00	0.00	0.00	0.00	0.00	**0.00**
Ditch Transfer (Lower Boulder, P)	(acre-feet)	0.00	0.00	0.00	0.00	0.00	0.00	0.00	0.00	0.00	0.00	0.00	0.00	**0.00**
Ditch Transfer (Lower Boulder, C)	(acre-feet)	0.00	0.00	0.00	0.00	0.00	0.00	0.00	0.00	0.00	0.00	0.00	0.00	**0.00**
Ditch Transfer (Rural)	(acre-feet)	0.00	0.00	0.00	0.00	0.00	0.00	0.00	0.00	0.00	0.00	0.00	0.00	**0.00**
Net Loss/Gain	(acre-feet)	-2.08	-2.42	-3.81	-19.34	22.04	208.07	185.51	36.99	29.18	-24.33	-2.77	-2.08	
Storage Reservoir Volume	(acre-feet)	28.8	26.4	22.6	3.3	25.3	60.1	60.1	60.1	60.1	35.8	33.0	30.9	
Top Irrigation Depth	(feet)	8	8	8	8	8	8	8	8	8	8	8	8	
Overall Pond Depth	(feet)	6.44	6.32	6.13	5.16	6.26	8.00	8.00	8.00	8.00	6.79	6.65	6.54	
Bottom Irrigation Depth	(feet)	5	5	5	5	5	5	5	5	5	5	5	5	

Volume Shortage (acre-feet) = -424.96

Notes:

Irrigation Reservoir Surface Area =	20.26
# Irrigation Shares (CR) =	879
# Irrigation Shares (HSS) =	0
# Irrigation Shares (LB-P) =	0
# Irrigation Shares (LB-C) =	0
# Irrigation Shares (R) =	0

FIGURE E4

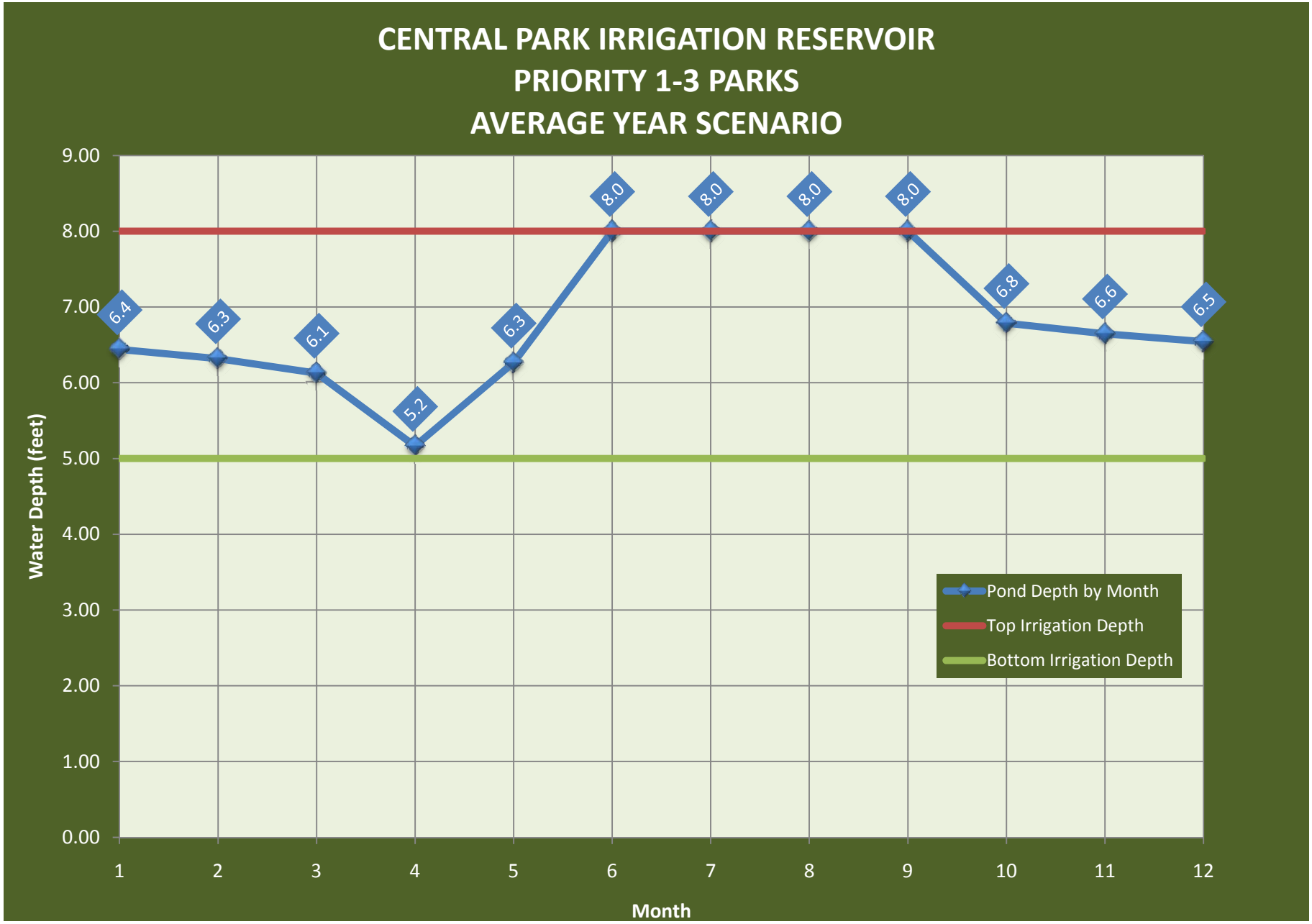
CENTRAL PARK IRRIGATION RESERVOIR
PRIORITY 1-3 PARKS
AVERAGE YEAR SCENARIO
Water Depth (feet)
9.00
8.00
7.00
6.00
5.00
4.00
3.00
2.00
1.00
0.00
1
2
3
4
5
6
7
8
9
10
11
12
Month
6.4
6.3
6.1
5.2
6.3
8.0
8.0
8.0
8.0
6.8
6.6
6.5
Pond Depth by Month
Top Irrigation Depth
Bottom Irrigation Depth

TABLE E5
CENTRAL PARK IRRIGATION RESERVOIR
PRIORITY 1-3 PARKS
DROUGHT YEAR SCENARIO

Description	Units	Monthly Totals												Total
		January 1	February 2	March 3	April 4	May 5	June 6	July 7	August 8	September 9	October 10	November 11	December 12	
Evaporation	(acre-feet)	2.08	2.42	3.81	6.23	8.31	10.04	10.38	9.34	6.92	4.85	2.77	2.08	**69.22**
Irrigation Demand (Priority 1-3)	(acre-feet)	0.00	0.00	0.00	100.27	78.77	132.09	162.61	123.70	83.23	38.99	0.00	0.00	**719.66**
Ditch Transfer (New Coal Ridge)	(acre-feet)	0.00	0.00	0.00	206.34	195.48	271.50	130.32	119.46	108.60	108.60	0.00	0.00	**1140.30**
Ditch Transfer (Highland South Side)	(acre-feet)	0.00	0.00	0.00	0.00	0.00	0.00	0.00	0.00	0.00	0.00	0.00	0.00	**0.00**
Ditch Transfer (Lower Boulder, P)	(acre-feet)	0.00	0.00	0.00	0.00	0.00	0.00	0.00	0.00	0.00	0.00	0.00	0.00	**0.00**
Ditch Transfer (Lower Boulder, C)	(acre-feet)	0.00	0.00	0.00	0.00	0.00	0.00	0.00	0.00	0.00	0.00	0.00	0.00	**0.00**
Ditch Transfer (Rural)	(acre-feet)	0.00	0.00	0.00	0.00	0.00	0.00	0.00	0.00	0.00	0.00	0.00	0.00	**0.00**
Net Loss/Gain	(acre-feet)	-2.08	-2.42	-3.81	99.84	108.40	129.37	-42.67	-13.58	18.45	64.76	-2.77	-2.08	
Storage Reservoir Volume	(acre-feet)	53.2	50.7	46.9	60.1	60.1	60.1	17.4	3.8	22.3	60.1	57.3	55.2	
Top Irrigation Depth	(feet)	8	8	8	8	8	8	8	8	8	8	8	8	
Overall Pond Depth	(feet)	7.65	7.53	7.34	8.00	8.00	8.00	5.87	5.19	6.11	8.00	7.86	7.76	
Bottom Irrigation Depth	(feet)	5	5	5	5	5	5	5	5	5	5	5	5	

Volume Shortage (acre-feet) = -351.42

Notes:

Irrigation Reservoir Surface Area =	20.26
# Irrigation Shares (CR) =	1086
# Irrigation Shares (HSS) =	0
# Irrigation Shares (LB-P) =	0
# Irrigation Shares (LB-C) =	0
# Irrigation Shares (R) =	0

FIGURE E5

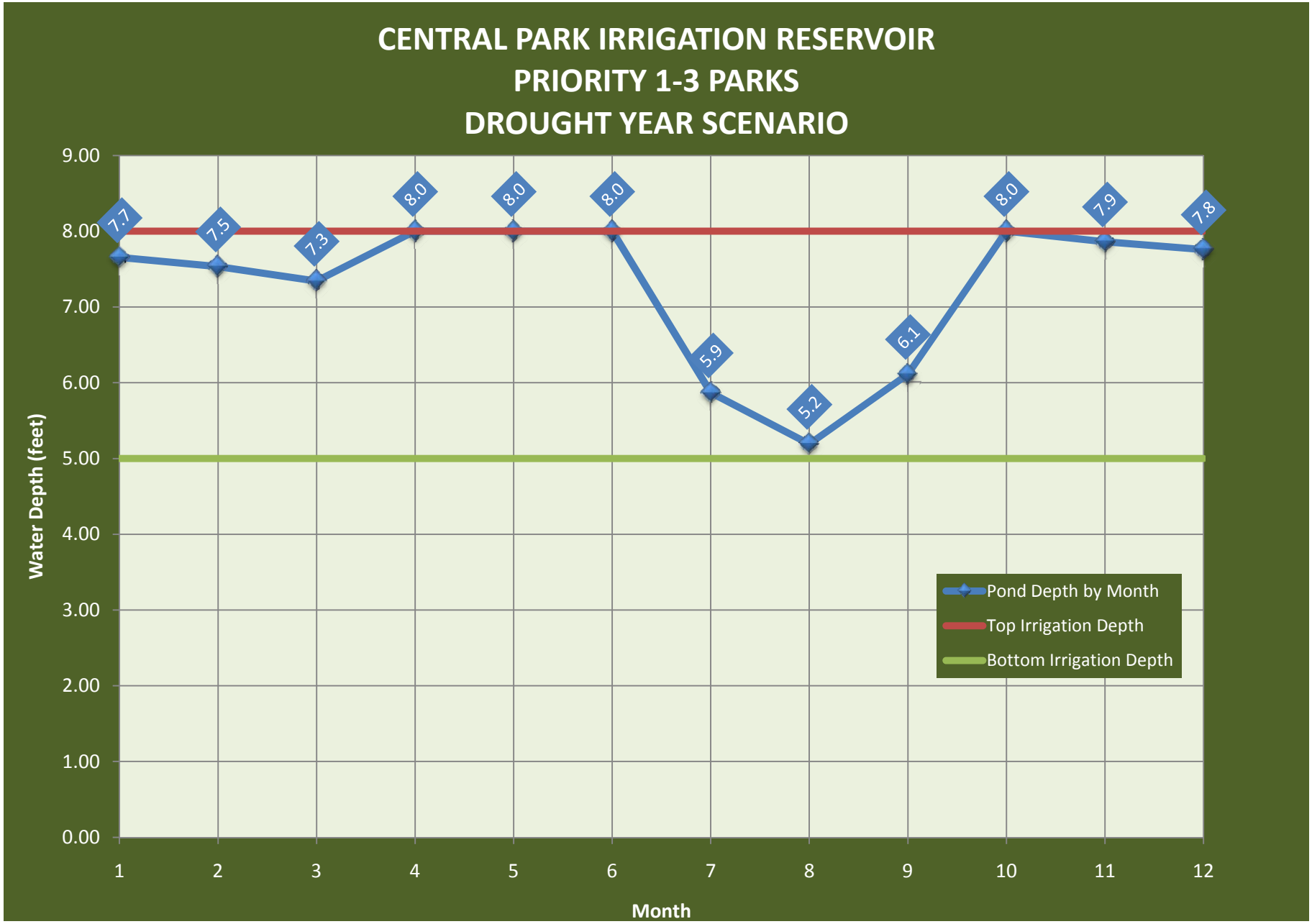
CENTRAL PARK IRRIGATION RESERVOIR
PRIORITY 1-3 PARKS
DROUGHT YEAR SCENARIO
Water Depth (feet)
9.00
8.00
7.00
6.00
5.00
4.00
3.00
2.00
1.00
0.00
1
2
3
4
5
6
7
8
9
10
11
12
Month
7.7
7.5
7.3
8.0
8.0
8.0
5.9
5.2
6.1
8.0
7.9
7.8
Pond Depth by Month
Top Irrigation Depth
Bottom Irrigation Depth

TABLE E6
CENTRAL PARK IRRIGATION RESERVOIR
GROSS ANNUAL EVAPORATION

Month		Evaporation Distribution[1] (%)	Gross Water Surface Evaporation[2] (inches)	(ac-ft/acre)
January	1	3.0%	1.23	0.10
February	2	3.5%	1.44	0.12
March	3	5.5%	2.26	0.19
April	4	9.0%	3.69	0.31
May	5	12.0%	4.92	0.41
June	6	14.5%	5.95	0.50
July	7	15.0%	6.15	0.51
August	8	13.5%	5.54	0.46
September	9	10.0%	4.10	0.34
October	10	7.0%	2.87	0.24
November	11	4.0%	1.64	0.14
December	12	3.0%	1.23	0.10
Total		**100.0%**	**41.00**	**3.42**

Notes:

[1]Clear Water Solutions, Inc.

[2]gross annual evaporation = 41.00 inches

from NOAA Technical Report NWS 33

FIGURE E6

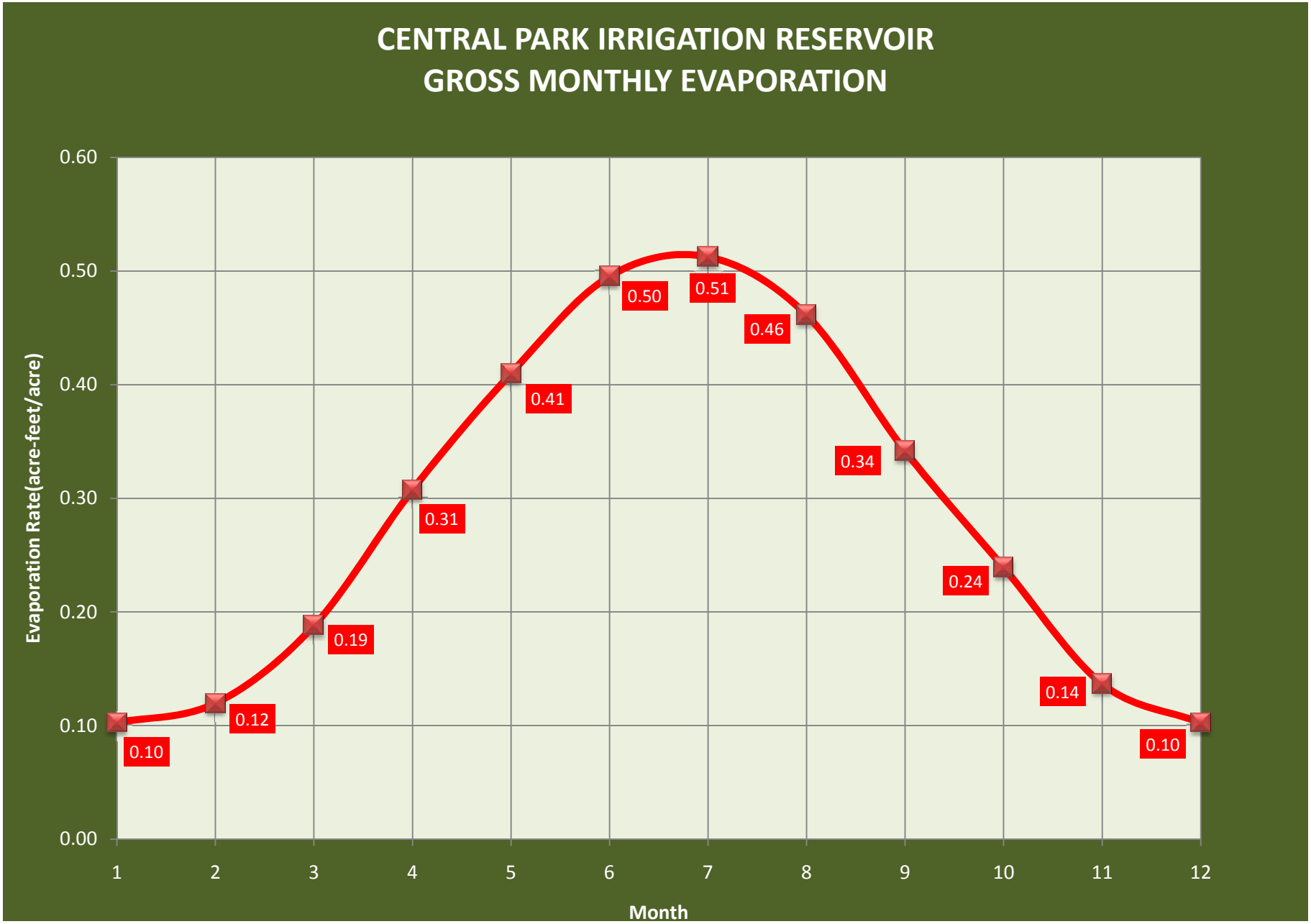
CENTRAL PARK IRRIGATION RESERVOIR
GROSS MONTHLY EVAPORATION
Evaporation Rate(acre-feet/acre)
0.60
0.50
0.40
0.30
0.20
0.10
0.00
0.10
0.12
0.19
0.31
0.41
0.50
0.51
0.46
0.34
0.24
0.14
0.10
1
2
3
4
5
6
7
8
9
10
11
12
Month

Appendix F: Transfer Pump System Calculations

APPENDIX F
TRANSFER SYSTEM PUMP STATION DESIGN CALCULATIONS

Transfer Pump System requirements are calculated for the Average Year, Drought Year, and Public Works Scenarios:

Average Year Scenario:

Transfer Pump Station requirements for the Average Year Scenario is based on the following assumptions:

- Transfer Pump (TP) Station rate for the month of July
- Park Priority 1-3 irrigation requirement of 128.4 acre-feet for the month of July
- Central Park evaporation requirement of 10 acre-feet (approximate) for the month of July
- Irrigation water is transferred seven (7) days per week
- Irrigation water is transferred twenty (24) hours per day

$$TP\ rate = \left(\frac{128.4\ \cancel{acre-ft}}{\cancel{July}}\right)\left(\frac{43{,}560\cancel{ft^2}}{1\ \cancel{acre}}\right)\left(\frac{7.481\ gal}{1\ \cancel{ft^3}}\right)\left(\frac{\cancel{July}}{31\ \cancel{days}}\right)\left(\frac{1\ \cancel{day}}{24\ \cancel{hours}}\right)\left(\frac{1\ \cancel{hour}}{60\ min}\right)$$
$$= \mathbf{937.3\ \frac{gal}{min}}$$

Drought Year Scenario:

Transfer Pump Station requirements for the Drought Year Scenario is based on the following assumptions:

- Transfer Pump (TP) Station rate for the month of July
- Park Priority 1-3 irrigation requirement of 161.4 acre-feet for the month of July
- Central Park evaporation requirement of 10 acre-feet (approximate) for the month of July
- Irrigation water is transferred seven (7) days per week
- Irrigation water is transferred twenty (24) hours per day

$$TP\ rate = \left(\frac{171.4\ \cancel{acre-ft}}{\cancel{July}}\right)\left(\frac{43{,}560\cancel{ft^2}}{1\ \cancel{acre}}\right)\left(\frac{7.481\ gal}{1\ \cancel{ft^3}}\right)\left(\frac{\cancel{July}}{31\ \cancel{days}}\right)\left(\frac{1\ \cancel{day}}{24\ \cancel{hours}}\right)\left(\frac{1\ \cancel{hour}}{60\ min}\right)$$
$$= \mathbf{1{,}251.2\ \frac{gal}{min}}$$

Public Works Scenario:

This scenario is not recommended as stated in Section 1.6. These calculations were performed to show that the flow requirements for this scenario could be met with some slight modifications to the transfer pump station.

Transfer Pump Station requirements for the Drought Year Scenario is based on the following assumptions:

- Transfer Pump (TP) Station rate for the month of July

- Park Priority 1-3 irrigation requirement of 178.4 acre-feet for the month of July
- Central Park evaporation requirement of 10 acre-feet (approximate) for the month of July
- Irrigation water is transferred seven (7) days per week
- Irrigation water is transferred twenty (24) hours per day

$$TP\ rate = \left(\frac{188.4\ \cancel{acre-ft}}{\cancel{July}}\right)\left(\frac{43{,}560\cancel{ft^2}}{1\ \cancel{acre}}\right)\left(\frac{7.481\ gal}{1\ \cancel{ft^3}}\right)\left(\frac{\cancel{July}}{31\ \cancel{days}}\right)\left(\frac{1\ \cancel{day}}{24\ \cancel{hours}}\right)\left(\frac{1\ \cancel{hour}}{60\ min}\right)$$

$$= \mathbf{1{,}375.3}\ \boldsymbol{\frac{gal}{min}}$$

PUMP STATION PRELIMINARY DESIGN CALCULATIONS

The pump station head requirements can be calculated using the Bernoulli equation. The subscripts $_s$ and $_d$ represent suction and discharge, respectively. The overall equation is as follows:

$$\frac{p_s}{\gamma} + \frac{v_s^2}{2g} + z_s + h_p = \frac{p_d}{\gamma} + \frac{v_d^2}{2g} + z_d + \sum h_L + \sum h_m$$

where:

$p = pressure \left(\frac{lbf}{in^2}\right)\left(144\frac{in^2}{ft^2}\right)$

$\gamma = specific\ weight\ of\ water \left(62.4\frac{lbf}{ft^3}\right)$

$v = velocity \left(\frac{ft}{s}\right)$

$g = gravitational\ coefficient\ \left(32.2\frac{ft}{s^2}\right)$

$z = water\ surface\ elevation\ (ft)$

$h_p = pump\ head\ (ft)$

$\sum h_m = summation\ of\ the\ minor\ headloss\ (ft)\ is\ calculated\ using\ the\ following\ equation$:

$$\sum h_m = \sum K h_v$$

where:

$K = loss\ coefficient$

$h_v = velocity\ head\ (ft)\ is\ calculated\ using\ the\ following\ equation$:

$$h_v = \frac{v^2}{2g}$$

$\sum h_L = summation\ of\ the\ headloss\ (ft) is\ calculated\ using\ the\ Hazen - Williams\ equation$:

$$\sum h_L = \frac{10.44(L)\left(Q_{gpm}^{1.85}\right)}{\left(C^{1.85}\right)\left(d_{inches}^{4.87}\right)}$$

where:

$L = length\ of\ pipe\ (ft)$

$Q = flow\ rate\ (gpm)$

$C = Hazen - Williams\ coefficient$

$d = pipe\ diameter\ (in)$

The pump head or total dynamic head (TDH) can be calculated by the following:

$$h_p = \left(\frac{p_d}{\gamma} - \frac{p_s}{\gamma}\right) + \left(\frac{v_d^2}{2g} - \frac{v_s^2}{2g}\right) + (z_{d-}z_s) + \sum h_L + \sum h_m$$

When pumping to or from a water surface exposed to the atmosphere, then the pressure head and velocity head are equal to zero:

$$\frac{p}{\gamma} = \frac{v^2}{2g} = 0$$

TABLE F1
TRANSFER PUMP STATION DESIGN
VOGL

	Design Parameters	Units	Value	Data Source
Force Main	Maximum Force Main Elevation	feet	4,945.00	USGS Map, Gowanda
	Atmospheric Pressure @ 5,000 feet	feet	28.22	CERM, Appendix 18.A[1]
Transfer Pump Station Parameters	Pump Station Site Elevation	feet	4,880.00	USGS Map, Gowanda
	Pump Depth	feet	15.00	Master Plan
	Pump Station Flow Rate (gpm)	gpm	1,250.00	Master Plan
	Discharge Pipe Length	feet	12,135.00	Master Plan
	Discharge Pipe Material		P.V.C.	Master Plan
	Discharge Pipe Pressure Class		165.00	AWWA C900-07, Table 1
	Discharge Pipe Nominal Size	inches	12.00	AWWA C900-07, Table 1
	Discharge Pipe I.D.	inches	12.14	AWWA C900-07, Table 1
	Hazen-Williams Coefficient, C		130.00	CERM, Appendix 19.A[1]
	Discharge Pipe Velocity	feet/sec	3.46	*equation*
	Discharge Pipe Headloss	feet	43.69	*equation*
	Pump Station/Discharge Pipe Minor Losses[2]	feet	10.92	*equation*
	Irrigation Reservoir/Ditch Suction High H.G.L.	feet	4,877.50	Master Plan
	Irrigation Reservoir/Ditch Suction Low H.G.L.	feet	4,872.50	*equation*
	Atmospheric Pressure @ 5,000 feet	feet	28.22	CERM, Appendix 18.A[1]
	Minimum Suction Head Available	feet	35.72	*equation*
	Minimum Suction Head Required[3]	feet	25.10	pump manufacturer
	Suction Head Acceptable?		YES	*equation*
	Pump TDH	feet	127.11	*equation*
	Pump Approximate Discharge Pressure	psi	55.08	*equation*

[1]Civil Engineering Reference Manual (CERM), Ninth Edition

[2]estimated to be 25% of the Discharge Pipe Headloss

[3]ITT FLYGT Model CP3300.181 Data Sheet

LEE MATHEWS EQUIPMENT INC

SALES • SERVICE • RENTAL

To: Colorado Civil Group
Attn: Chris Messersmith
RE: Firestone Transfer Pumps

Date: 8-27-08
Quote # 1108082

Transfer Pump Alternate 1
1259 GPM @132' TDH

Quantity	Description
1	ITT Flygt model CP3300.181 submersible non-clog wastewater pump with impeller #465, driven by a 88 HP 1775 RPM 460/3/60 submersible motor with motor over temperature detector and model FLS seal leakage sensor, with 50' power cable.
1	6"x8" discharge connection base elbow
1	3" stainless steel upper guide bar bracket
2	20' stainless steel 3" guide rails
1	20' 316 stainless steel lifting chain kit with two s/s shackles.
1	Flygt 120V Mini-Cas to receive motor over temperature and seal leakage signals.
1	Plotted, Certified, in factory performance test.

Your total net price: **$42,755**

Transfer Pump Alternate 2
1259 GPM @~~132'~~ 80' TDH

Quantity	Description
1	ITT Flygt model CP3201.180 submersible non-clog wastewater pump with impeller #452, driven by a 47 HP 1775 RPM 460/3/60 submersible motor with motor over temperature detector and model FLS seal leakage sensor, with 50' power cable.
1	6"x8" discharge connection base elbow
1	3" stainless steel upper guide bar bracket
2	20' stainless steel 3" guide rails
1	20' 316 stainless steel lifting chain kit with two s/s shackles.
1	Flygt 120V Mini-Cas to receive motor over temperature and seal leakage signals.
1	Plotted, Certified, in factory performance test.

Your total net price: **$26,093**

6345 DOWNING · DENVER, CO 80216
303/ 227- 1002 · FAX 303 / 227-1004

Notes and Clarifications:

1. Installation not included in quoted price
2. Anchor Bolts not included in quoted price.

Terms: Net 30 Days with Approved Credit

Submittal Data: Approximately 2 weeks ARO

Delivery: Approximately 11 Weeks after approval of submittals.

Freight: FOB Factory with freight charge allowed to job site.

Quote Validity: 30 Days

*Please Note: Delivery estimates are made in good faith but are subject to delays resulting from conditions beyond our control. Liquidated damages are not acceptable without prior approval.

Quoted by Jeff Kirkland E.I.T.

Lee Mathews Equipment

303-227-1002

ACT, #1

PERFORMANCE CURVE

PRODUCT	CP3300.181
TYPE	HT
DATE	2008-08-26
PROJECT	
CURVE NO	63-465-00-2060
ISSUE	3

	1/1-LOAD	3/4-LOAD	1/2-LOAD
POWER FACTOR	0.85	0.82	0.74
EFFICIENCY	92.0 %	92.5 %	92.0 %
MOTOR DATA	---	---	---

RATED POWER	88	hp
STARTING CURRENT ...	550	A
RATED CURRENT ...	105	A
RATED SPEED	1775	rpm
TOT.MOM.OF INERTIA ...	0.81	kgm2
NO. OF BLADES	2	

IMPELLER DIAMETER: 320 mm

MOTOR #	STATOR	REV
35-28-4AA	38D	12

FREQ.	PHASES	VOLTAGE	POLES
60 Hz	3	460 V	4

GEARTYPE	RATIO
---	---

COMMENTS

INLET/OUTLET: -/ 6 inch

IMP. THROUGHLET: 3.0 inch

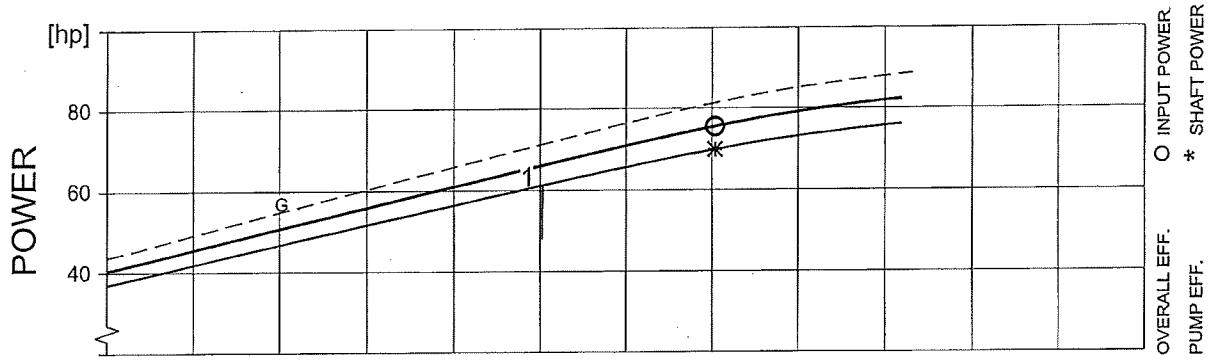

DUTY-POINT	FLOW[USgpm]	HEAD[ft]	POWER [hp]	EFF. [%]	NPSHre[ft]	GUARANTEE
1	1259	132	66.2 (61.2)	63.4 (68.5)	25.1	
B.E.P.	1759	112		65.9 (71.2)	29.4	HI level A

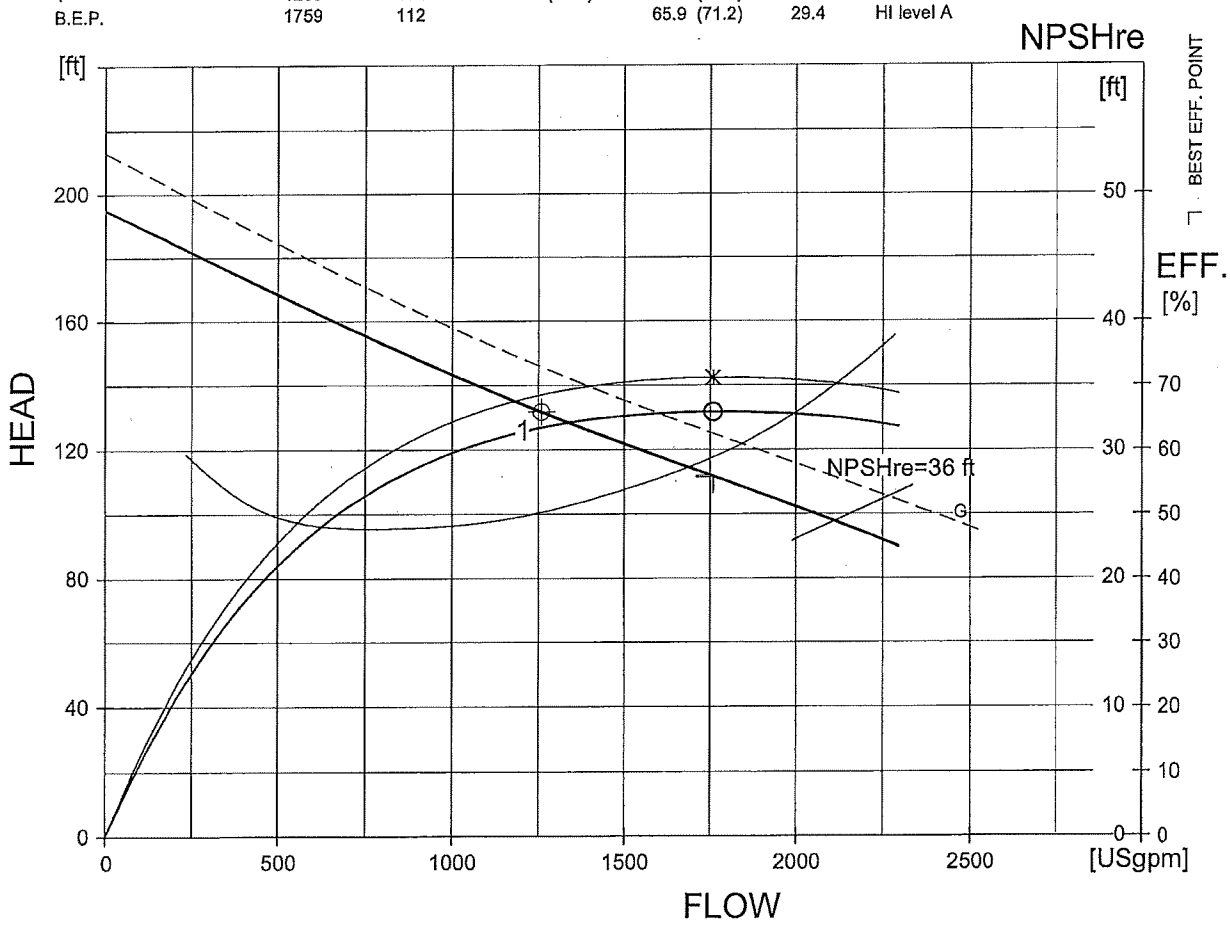

FLYPS3.1.6.2 (20060531)

NPSHre = NPSH3% + min. operational margin

Performance with clear water and ambient temp 40 °C

GUARANTEE BETWEEN LIMITS (G) ACC. TO

HI level A

ITT
Water & Wastewater

C-3300

Impeller/Motor/ Nominal Sizes | Issued: 11/05 | Supersedes: 8/02

PUMP MODEL	IMPELLER CODE	HP RATING CP	HP RATING CS	HP RATING CT	HP RATING CZ	VAC	D1	D2	D3	D4
3300 3Ø	454 HT	88	- -	- -	- -	460,575			- -	- -
	460 HT	❶	❶	❶	❶					
	461 HT 462 HT 463 HT 464 HT 465 HT 466 HT	88	88	88	88		8"	6"	6" or 8"	8"
	467 HT 468 HT	60,88 60,88	60,88 60,88	60,88 60,88	60,88 60,88					
	636 MT	75	75	- -	- -		12"	10"	8"	- -
	638 MT 640 MT	60,75 ❷	60,75 ❷	- - ❸	- - ❸					
	642 MT	75	75	75	75					
	644 MT 646 MT 648 MT	60,75 60,75 60,75	60,75 60,75 60,75	60,75 60,75 60,75	60,75 60,75 60,75		12"	10"	8"	12"

MT= Standard HT= High Head

❶ 100, 130 or 160 HP (.6x5) motors may be used - refer to curve
❷ 60, 75 or 90, 110 HP (.6x5) motors may be used - refer to curve
❸ 90, 110 HP (.6x5) motors may be used - refer to curve

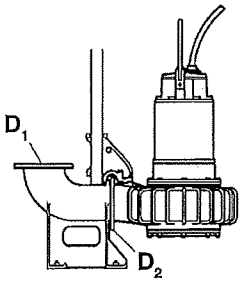

CP

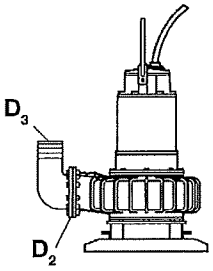

CS

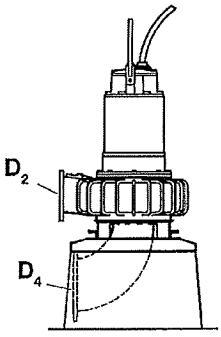

CT

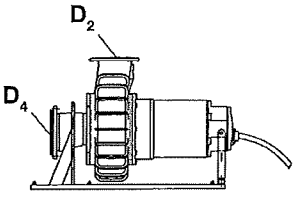

CZ

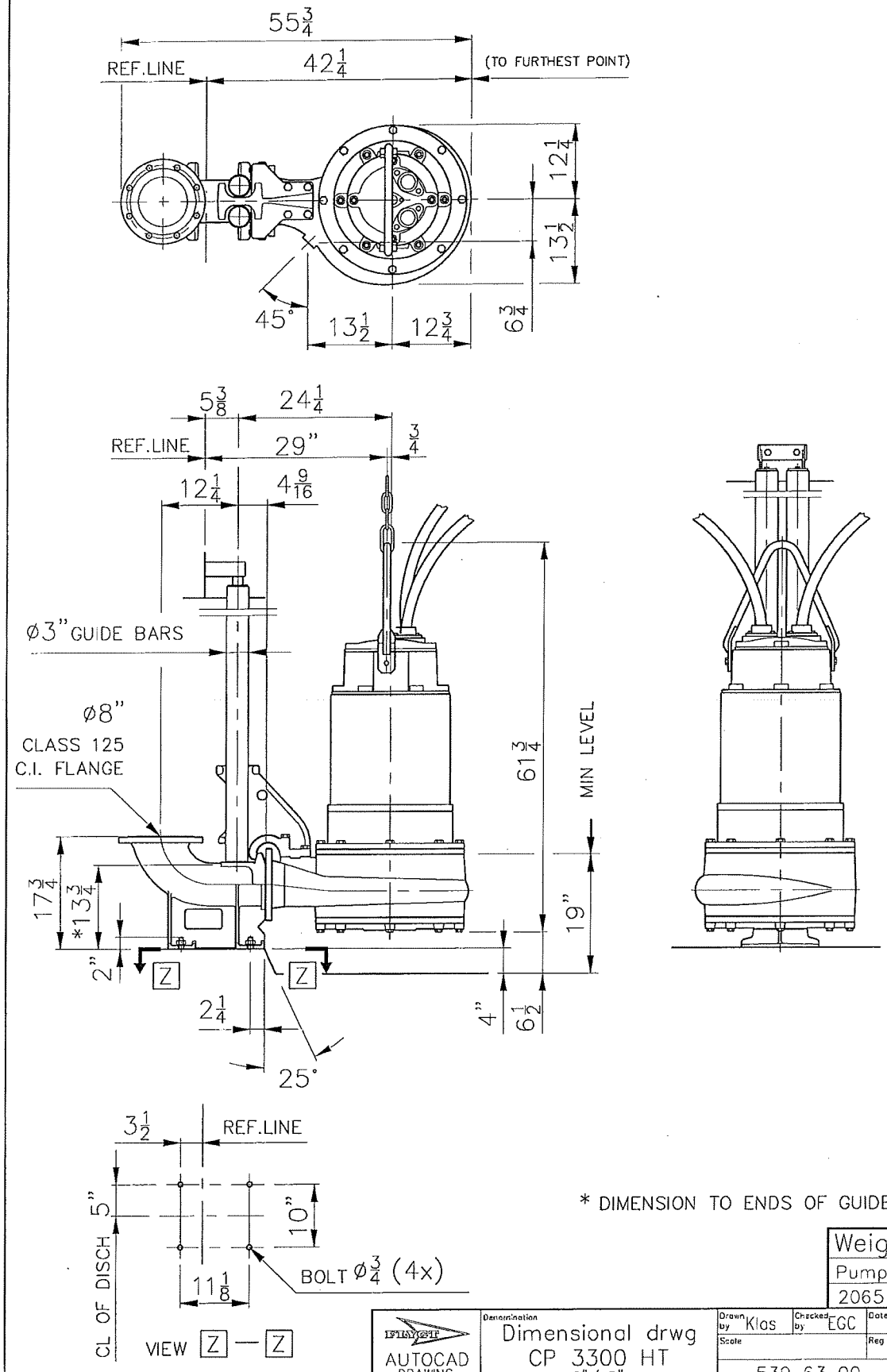

* DIMENSION TO ENDS OF GUIDE BARS

Weight (lbs)	
Pump	Disch
2065	145

FLYGT AUTOCAD DRAWING	Denomination: Dimensional drwg CP 3300 HT 6"/ 8"	Drawn by Klas / Checked by EGC	Date 880414
		Scale	Reg no 5399
		539 63 00	E

Generic Duplex Lift Station Layout

e-Catalog	FLYGT	Lift Station Guide Lines	Issued: 9/05	Supersedes: 5/05

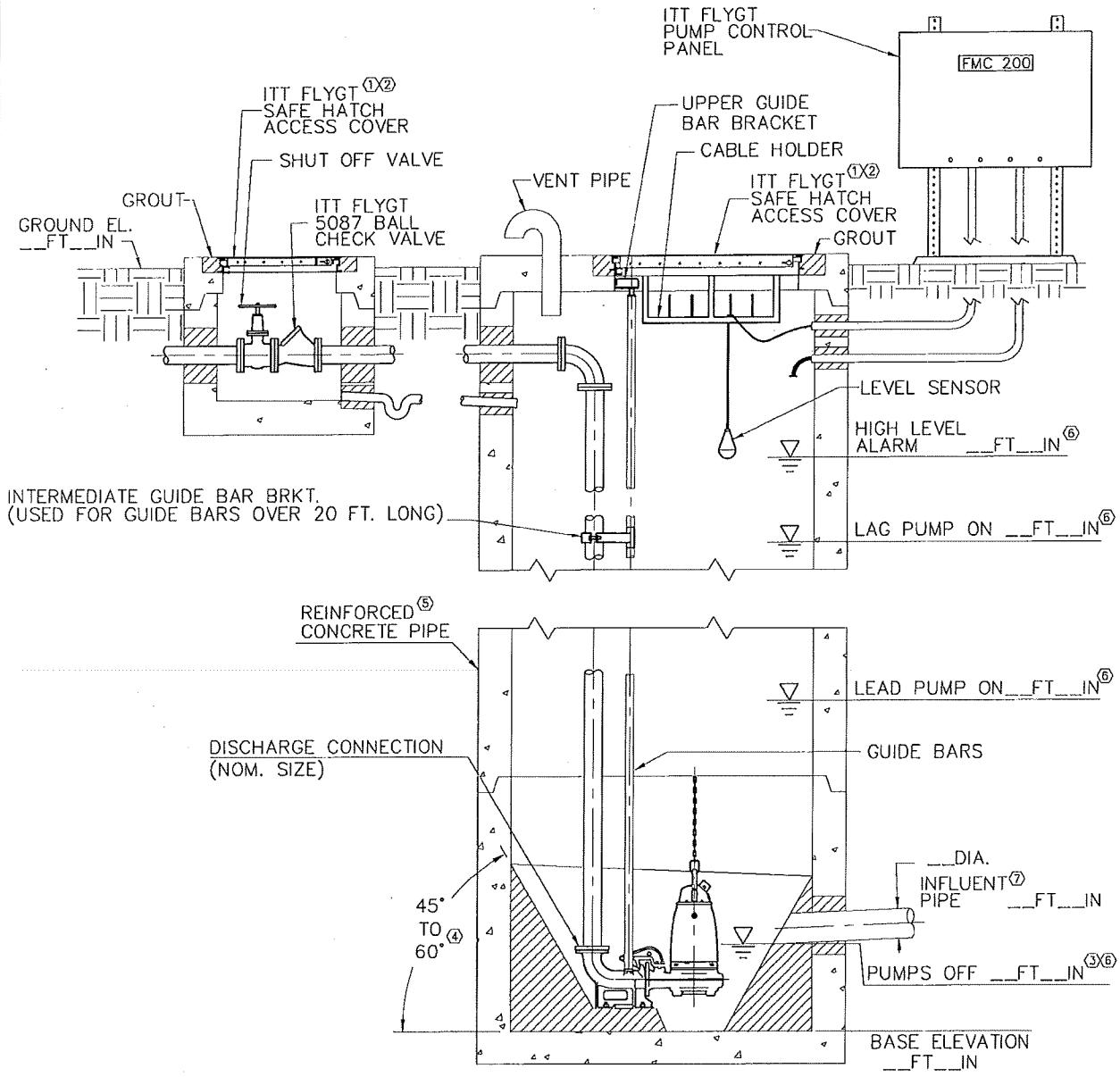

NOTES:

1. COVER SHOWN IS A STANDARD DUTY SAFE HATCH WITH ANGLE FRAME. FOR DIMENSIONS ON ACCESS COVERS WITH SAFE HATCH OR WITHOUT SAFE HATCH AS WELL AS HEAVY DUTY OR OTHER TYPES, CONSULT ITT FLYGT.
2. INSTALL ACCESS COVERS PER MANUFACTURER'S INSTRUCTIONS.
3. MIN. LIQUID LEVEL MUST NOT FALL BELOW TOP OF VOLUTE.
4. 60° RECOMMENDED.
5. OTHER MATERIALS AVAILABLE. CONSULT ITT FLYGT.
6. ITT FLYGT LIQUID LEVEL CONTROL MONITIORING SYSTEM.
7. GOOD DESIGN PRACTICE DICTATES THAT INFLUENT PIPE ELEVATIONS HIGHER THAN LWL SHOULD BE AVOIDED DUE TO RISK OF AIR ENTRAINMENT, UNLESS SPECIAL ARRANGEMENTS ARE MADE.

CP-3300

e-Catalog	FLYGT	**Lift Station Dimensions**	Issued: 5/05	Supersedes:

NOTES:

1. CONFIGURATION AND DIMS. SHOWN ARE SUGGESTED REQUIREMENTS ONLY. ALL DETAILS, INCLUDING SIZING OF PIT, TYPE, LOCATION AND ARRANGEMENT OF VALVES AND PIPING, ETC. ARE TO BE SPECIFIED BY THE CONSULTING ENGINEER AND ARE SUBJECT TO THEIR APPROVAL.
2. REFERENCE GENERIC DUPLEX LIFT STATION LAYOUT FOR ELEVATION VIEW.
3. LOCATE ANCHOR BOLTS USING INSIDE EDGE OF CLEAR OPENING AND PUMP CENTERLINE AS REFERENCE POINT. BOLT LOCATIONS MUST BE HELD TO MAINTAIN EXACT POSITION OF PUMP TO CLEAR OPENING.
4. ITT FLYGT MIX-FLUSH VALVE.

Simplex

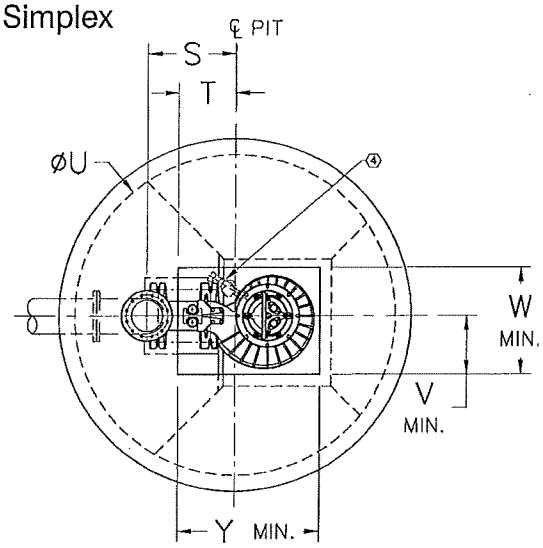

TOP VIEW

Duplex

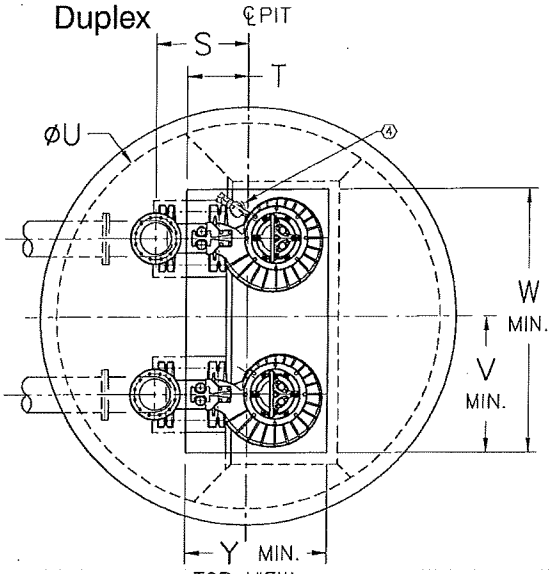

TOP VIEW

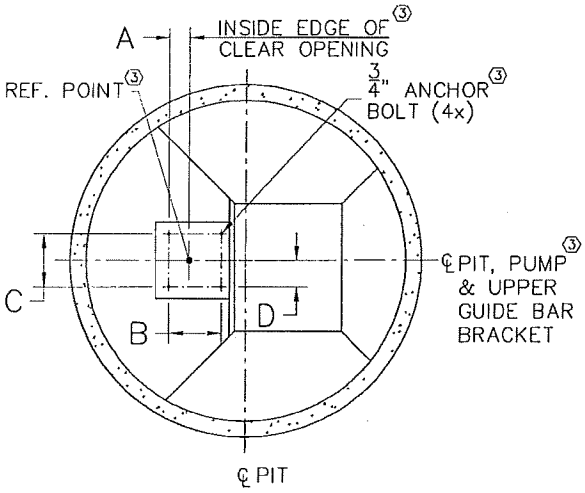

BASE SECTION

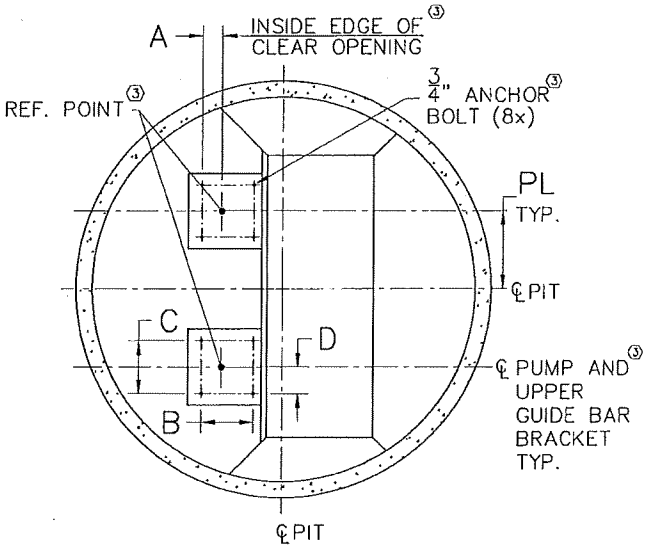

BASE SECTION

ALL DIMENSIONS ARE IN INCHES

NOM. SIZE	VERSION	SIMPLEX A	SIMPLEX B	SIMPLEX C	SIMPLEX D	SIMPLEX S	SIMPLEX T	SIMPLEX U	SIMPLEX V	SIMPLEX W	SIMPLEX Y	DUPLEX S	DUPLEX T	DUPLEX U	DUPLEX PL	DUPLEX V	DUPLEX W	DUPLEX Y
* 8"	HT	3½	11	10	5	20⅜	13½	84	18½	32½	44½	20⅝	13¾	96	17	33½	66½	44½
12"	MT	7⅝	19¾	19¾	9⅞	33	21¼	120	22	40	53	34½	22¾	144	29	51	98	53
* 14"	LT	7⅝	19¾	19¾	9⅞	30¼	17½	120	19¾	38	50½	31¼	18½	144	29	48¾	96	50½

* ALSO AVAILABLE IN STAINLESS STEEL

682075-

TABLE F2
TRANSFER PUMP STATION DESIGN
PUBLIC WORKS FACILITY

	Design Parameters	Units	Value	Data Source
Force Main	Maximum Force Main Elevation	feet	4,972.00	USGS Map, Gowanda
	Atmospheric Pressure @ 5,000 feet	feet	28.22	CERM, Appendix 18.A[1]
Transfer Pump Station Parameters	Pump Station Site Elevation	feet	4,960.00	USGS Map, Gowanda
	Pump Depth	feet	15.00	Master Plan
	Pump Station Flow Rate (gpm)	gpm	1,250.00	Master Plan
	Discharge Pipe Length	feet	12,925.00	Master Plan
	Discharge Pipe Material		P.V.C.	Master Plan
	Discharge Pipe Pressure Class		165.00	AWWA C900-07, Table 1
	Discharge Pipe Nominal Size	inches	12.00	AWWA C900-07, Table 1
	Discharge Pipe I.D.	inches	12.14	AWWA C900-07, Table 1
	Hazen-Williams Coefficient, C		130.00	CERM, Appendix 19.A[1]
	Discharge Pipe Velocity	feet/sec	3.46	*equation*
	Discharge Pipe Headloss	feet	46.53	*equation*
	Pump Station/Discharge Pipe Minor Losses[2]	feet	11.63	*equation*
	Irrigation Ditch/Suction High H.G.L.	feet	4,957.50	Master Plan
	Irrigation Ditch/Suction Low H.G.L.	feet	4,952.50	*equation*
	Atmospheric Pressure @ 5,000 feet	feet	28.22	CERM, Appendix 18.A[1]
	Minimum Suction Head Available	feet	35.72	*equation*
	Minimum Suction Head Required[3]	feet	20.00	pump manufacturer
	Suction Head Acceptable?		YES	*equation*
	Pump TDH	feet	77.67	*equation*
	Pump Approximate Discharge Pressure	psi	33.65	*equation*

[1]Civil Engineering Reference Manual (CERM), Ninth Edition

[2]estimated to be 25% of the Discharge Pipe Headloss

[3]ITT FLYGT Model CP3201.180 Data Sheet

LEE MATHEWS EQUIPMENT INC

SALES • SERVICE • RENTAL

To: Colorado Civil Group
Attn: Chris Messersmith
RE: Firestone Transfer Pumps

Date: 8-27-08
Quote # 1108082

Transfer Pump Alternate 1
1259 GPM @132' TDH

Quantity	Description
1	ITT Flygt model CP3300.181 submersible non-clog wastewater pump with impeller #465, driven by a 88 HP 1775 RPM 460/3/60 submersible motor with motor over temperature detector and model FLS seal leakage sensor, with 50' power cable.
1	6"x8" discharge connection base elbow
1	3" stainless steel upper guide bar bracket
2	20' stainless steel 3" guide rails
1	20' 316 stainless steel lifting chain kit with two s/s shackles.
1	Flygt 120V Mini-Cas to receive motor over temperature and seal leakage signals.
1	Plotted, Certified, in factory performance test.

Your total net price: **$42,755**

Transfer Pump Alternate 2
1259 GPM @~~132'~~ TDH
80'

Quantity	Description
1	ITT Flygt model CP3201.180 submersible non-clog wastewater pump with impeller #452, driven by a 47 HP 1775 RPM 460/3/60 submersible motor with motor over temperature detector and model FLS seal leakage sensor, with 50' power cable.
1	6"x8" discharge connection base elbow
1	3" stainless steel upper guide bar bracket
2	20' stainless steel 3" guide rails
1	20' 316 stainless steel lifting chain kit with two s/s shackles.
1	Flygt 120V Mini-Cas to receive motor over temperature and seal leakage signals.
1	Plotted, Certified, in factory performance test.

Your total net price: **$26,093**

6345 DOWNING · DENVER, CO 80216
303/ 227- 1002 · FAX 303 / 227-1004

Notes and Clarifications:

1. Installation not included in quoted price
2. Anchor Bolts not included in quoted price.

Terms: Net 30 Days with Approved Credit

Submittal Data: Approximately 2 weeks ARO

Delivery: Approximately 11 Weeks after approval of submittals.

Freight: FOB Factory with freight charge allowed to job site.

Quote Validity: 30 Days

*Please Note: Delivery estimates are made in good faith but are subject to delays resulting from conditions beyond our control. Liquidated damages are not acceptable without prior approval.

Quoted by Jeff Kirkland E.I.T.

Lee Mathews Equipment

303-227-1002

BLT. #2

PERFORMANCE CURVE

PRODUCT	CP3201.180
TYPE	HT
DATE	2008-08-26
PROJECT	
CURVE NO	63-452-00-5350
ISSUE	7

	1/1-LOAD	3/4-LOAD	1/2-LOAD
POWER FACTOR	0.89	0.86	0.80
EFFICIENCY	87.5 %	87.5 %	86.0 %
MOTOR DATA	---	---	---

RATED POWER	47	hp
STARTING CURRENT ...	375	A
RATED CURRENT ...	57	A
RATED SPEED	1755	rpm
TOT.MOM.OF INERTIA ...	0.58	kgm2
NO. OF BLADES	1	

IMPELLER DIAMETER	330 mm
MOTOR #	27-26-4AA
STATOR	37YSER
REV	11
FREQ.	60 Hz
PHASES	3
VOLTAGE	460 V
POLES	4
GEARTYPE	---
RATIO	---

COMMENTS

INLET/OUTLET: -/ 6 inch

IMP. THROUGHLET: 3.0 inch

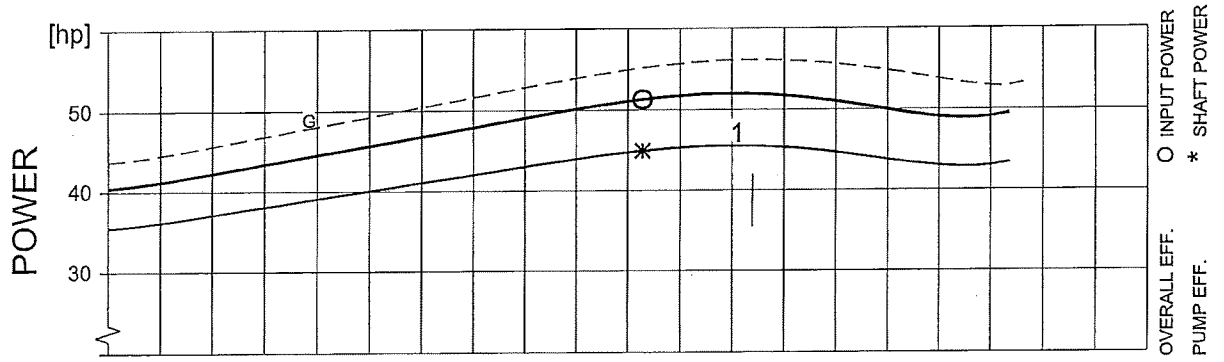

DUTY-POINT	FLOW[USgpm]	HEAD[ft]	POWER [hp]	EFF. [%]	NPSHre[ft]	GUARANTEE
1	1240	78.7	52.0 (45.6)	47.5 (54.3)	20.0	
B.E.P.	1028	96.8		49.1 (56.0)	17.3	HI level A

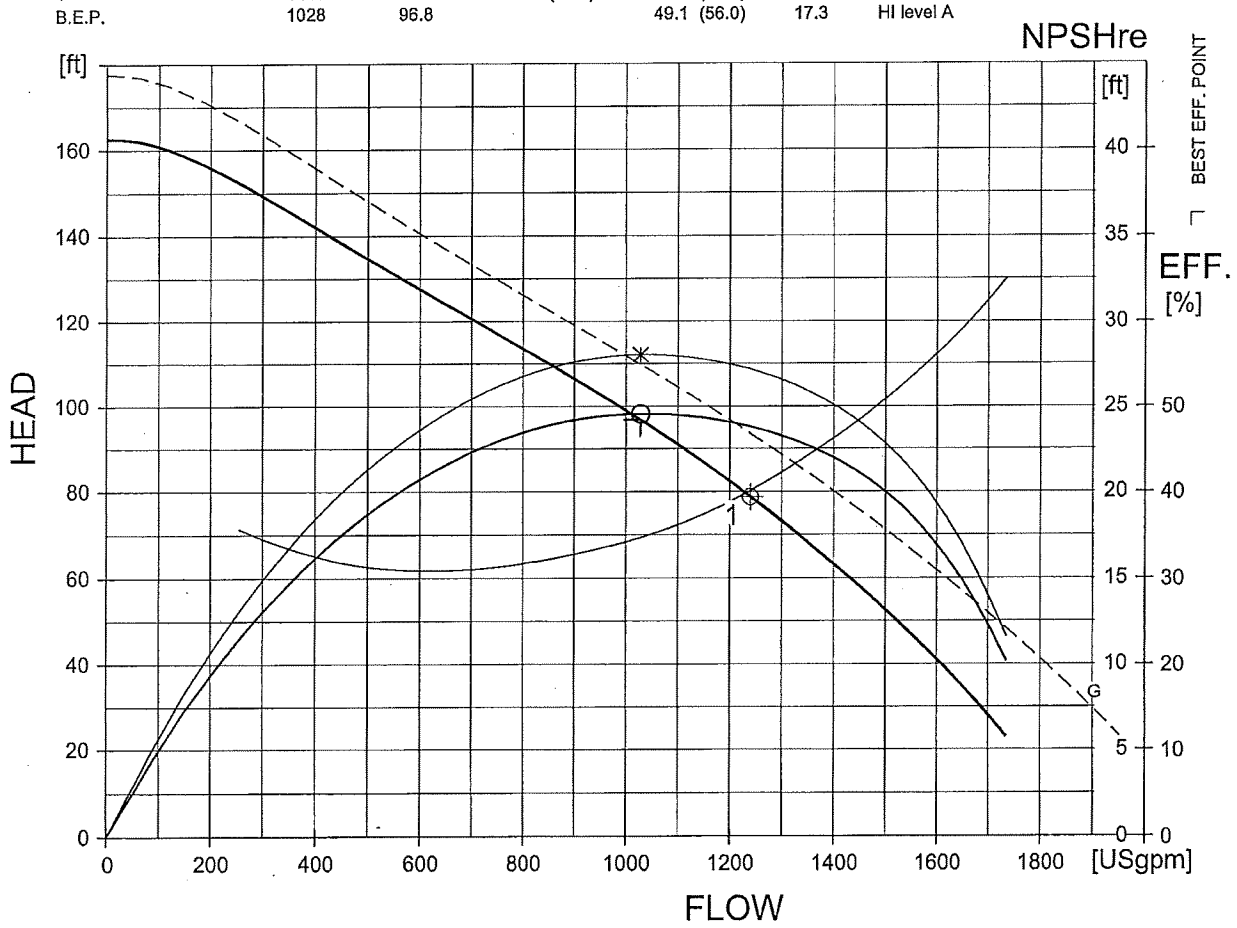

NPSHre = NPSH3% + min. operational margin

Performance with clear water and ambient temp 40 °C

GUARANTEE BETWEEN LIMITS (G) ACC. TO

HI level A

FLYPS3.1.6.2 (20060531)

FLYGT

PRODUCT: CP 3201 HT

Product picture

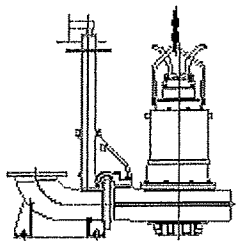

Curves **Enlarge**

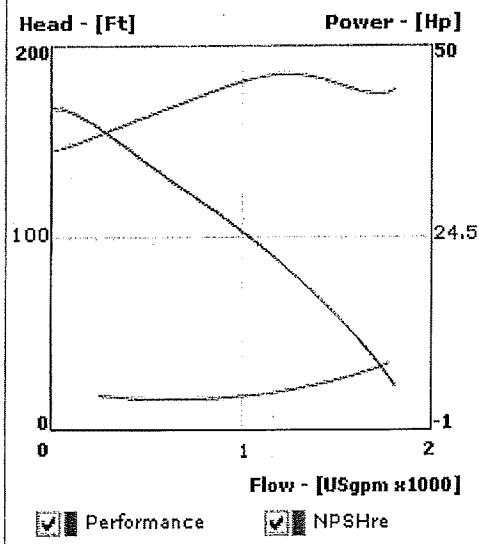

Pump Data

Curve id: 63-452-00-5350 Impeller: 452 Poles: 4 - pole Motor: 27-26-4AA Frequency: 60 Hz

Motor Data

Rated output power Hp (kW)	Ø	Nominal voltage (V)	Full load current (A)	Locked rotor current (A)	Locked rotor kVA	Locked rotor code letter kVA/Hp	Poles/rpm
47 (35)	3	460	57	375	298	H	4/1755
47 (35)	3	230	113	750	298	H	4/1755

Pump motor Hp	Efficiency			Power factor		
	100% load	75% load	50% load	100% load	75% load	50% load
47	87.5	87.5	86	0.89	0.86	0.8

Cable Data

HP	Cables	Volts	Max. length (Ft)	Cable size/Nominal OD.	Conductors (In one cable)	Type	Part number
47	1	460	290	#6/3-2-1-GC 1.22"-(31.0mm)	(3) 6 AWG (PWR) (2) 10 AWG (CTRL) (1) 8 AWG (GND) (1) 10 AWG (GC)	STD	942109
	2	230	145				

Available Discharge Connection Outlet Size

Outlet Drilled Flange	6" , 8"

Engineered for life

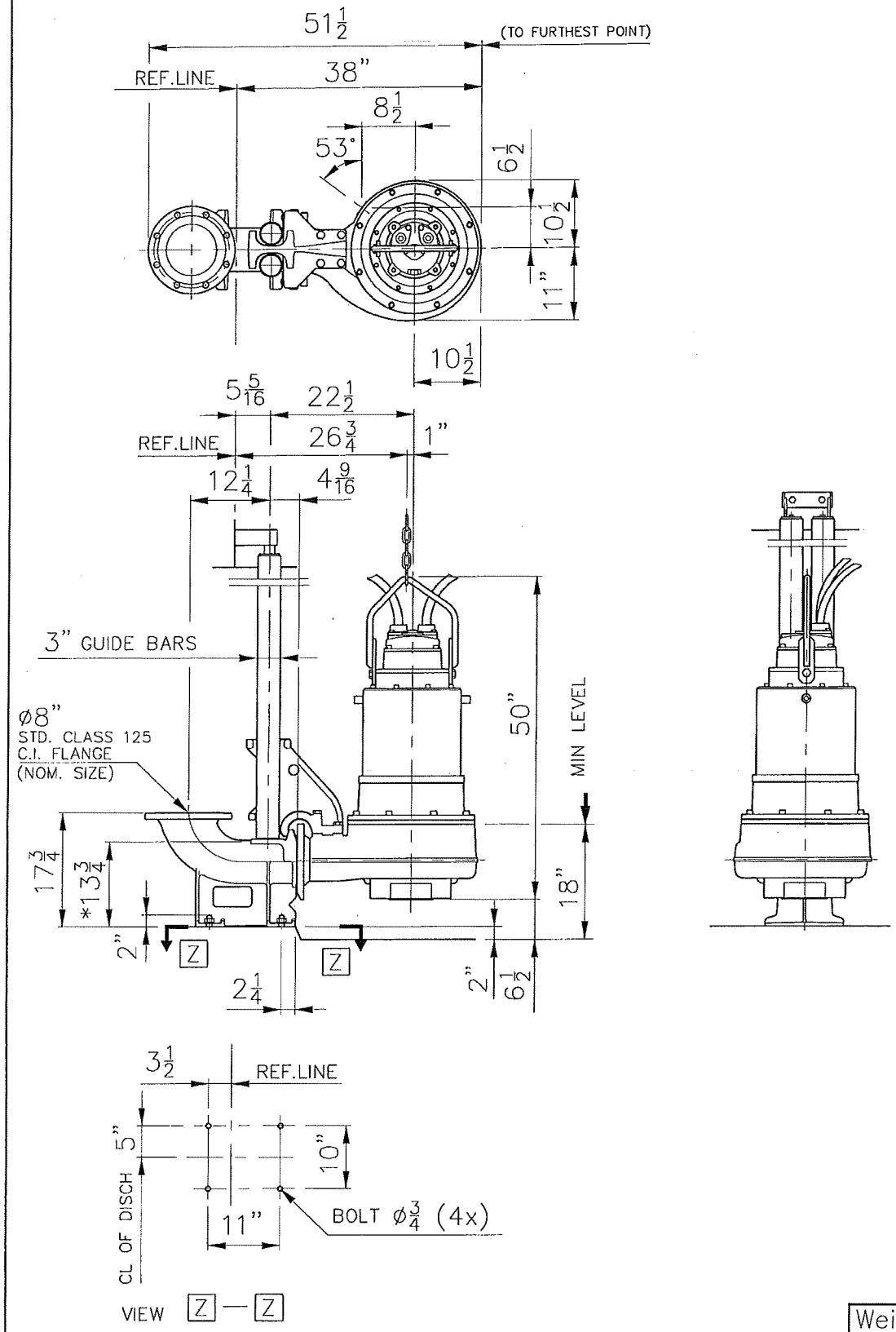

Weight (lbs)	
Pump	Disch
1135	145

* DIMENSION TO ENDS OF GUIDE BARS

FLYGT AUTOCAD DRAWING	Denomination: Dimensional drwg CP 3201 HT 6" / 8"	Drawn by: Klas	Checked by: EGC	Date: 880325
		Scale		Reg no: 5399
		539 51 00		C

Generic Duplex Lift Station Layout

e-Catalog	FLYGT	Lift Station Guide Lines	Issued: 9/05	Supersedes: 5/05

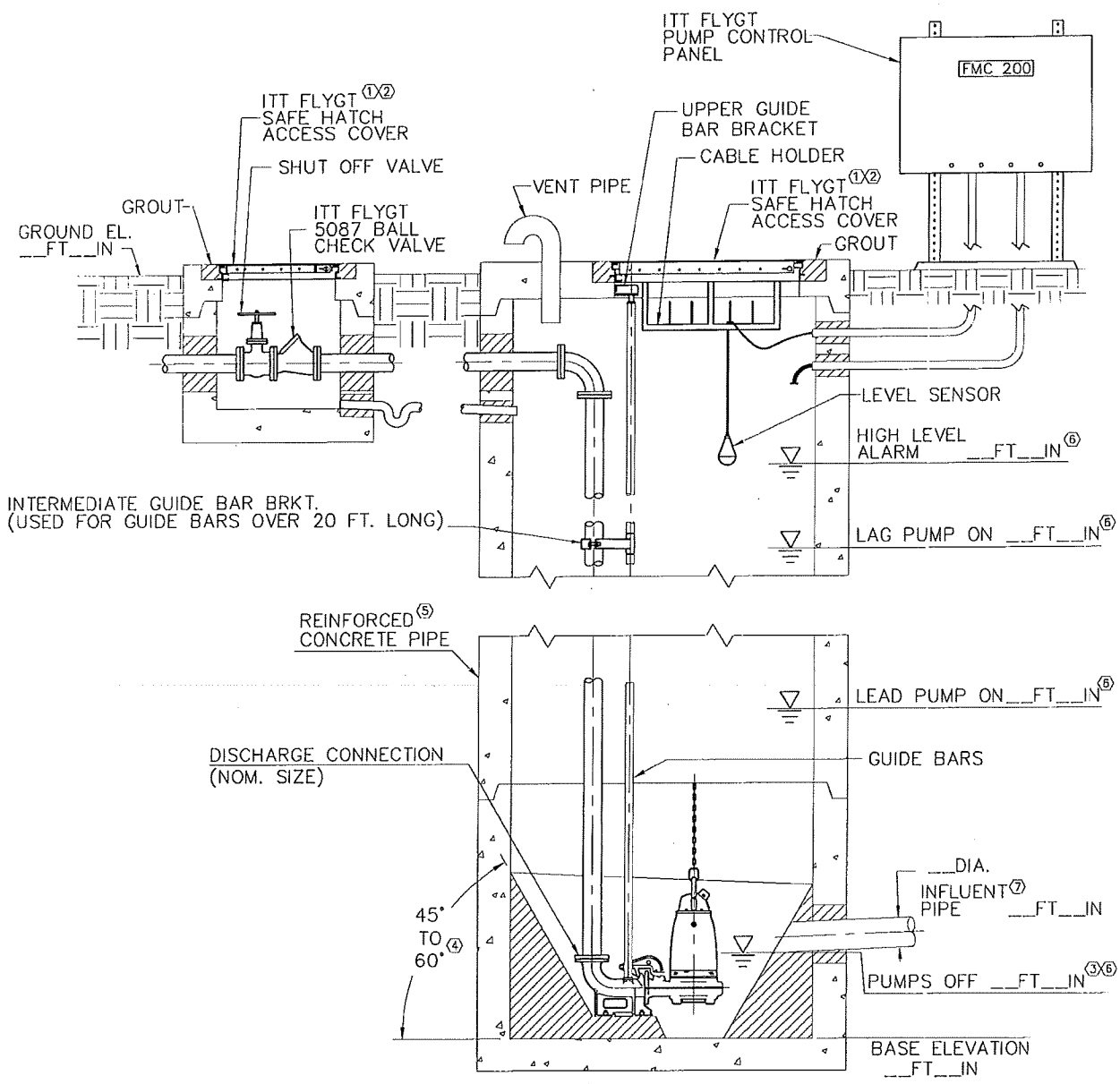

NOTES:

1. COVER SHOWN IS A STANDARD DUTY SAFE HATCH WITH ANGLE FRAME. FOR DIMENSIONS ON ACCESS COVERS WITH SAFE HATCH OR WITHOUT SAFE HATCH AS WELL AS HEAVY DUTY OR OTHER TYPES, CONSULT ITT FLYGT.
2. INSTALL ACCESS COVERS PER MANUFACTURER'S INSTRUCTIONS.
3. MIN. LIQUID LEVEL MUST NOT FALL BELOW TOP OF VOLUTE.
4. 60° RECOMMENDED.
5. OTHER MATERIALS AVAILABLE. CONSULT ITT FLYGT.
6. ITT FLYGT LIQUID LEVEL CONTROL MONITIORING SYSTEM.
7. GOOD DESIGN PRACTICE DICTATES THAT INFLUENT PIPE ELEVATIONS HIGHER THAN LWL SHOULD BE AVOIDED DUE TO RISK OF AIR ENTRAINMENT, UNLESS SPECIAL ARRANGEMENTS ARE MADE.

CP-3201

e-Catalog	FLYGT	**Lift Station Dimensions**	Issued: 7/05	Supersedes: 5/05

NOTES:

1. CONFIGURATION AND DIMS. SHOWN ARE SUGGESTED REQUIREMENTS ONLY. ALL DETAILS, INCLUDING SIZING OF PIT, TYPE, LOCATION AND ARRANGEMENT OF VALVES AND PIPING, ETC. ARE TO BE SPECIFIED BY THE CONSULTING ENGINEER AND ARE SUBJECT TO THEIR APPROVAL.
2. REFERENCE GENERIC DUPLEX LIFT STATION LAYOUT FOR ELEVATION VIEW.
3. LOCATE ANCHOR BOLTS USING INSIDE EDGE OF CLEAR OPENING AND PUMP CENTERLINE AS REFERENCE POINT. BOLT LOCATIONS MUST BE HELD TO MAINTAIN EXACT POSITION OF PUMP TO CLEAR OPENING.
4. ITT FLYGT MIX–FLUSH VALVE.

Simplex

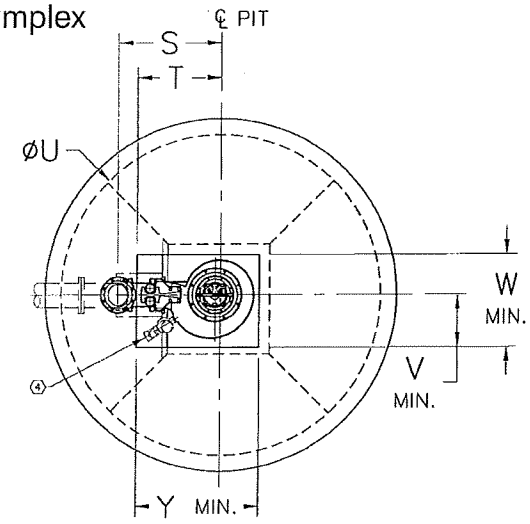

TOP VIEW

Duplex

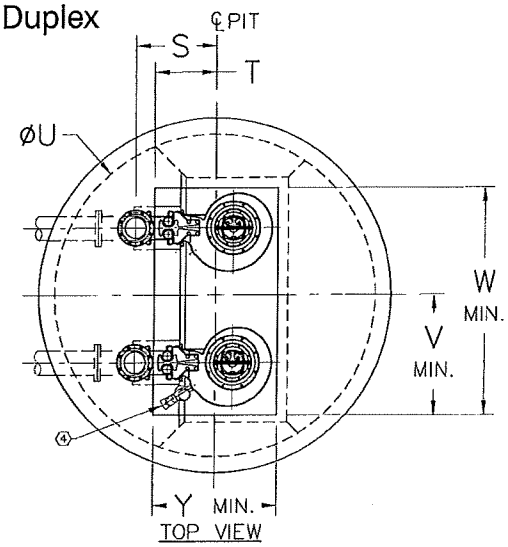

TOP VIEW

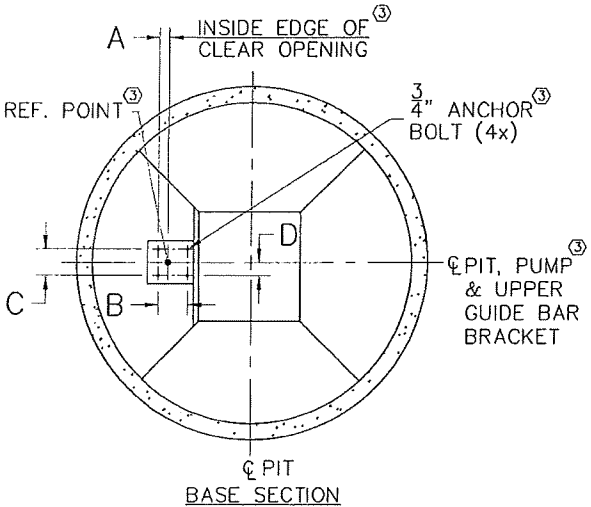

BASE SECTION

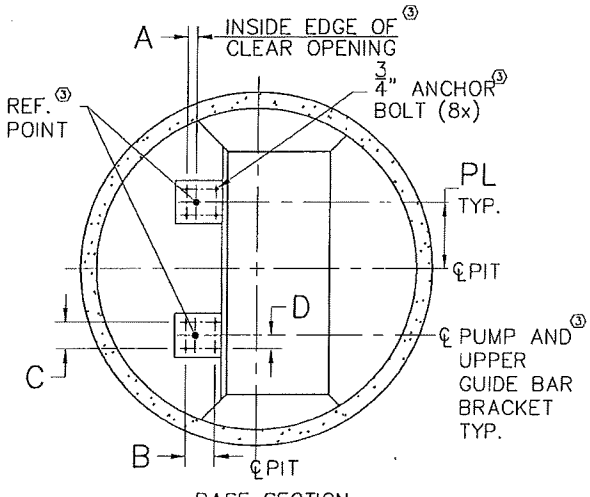

BASE SECTION

ALL DIMENSIONS ARE IN INCHES

NOM. SIZE	VERSION	SIMPLEX										DUPLEX						
		A	B	C	D	S	T	U	V	W	Y	S	T	U	PL	V	W	Y
4"	SH	3/4	9 7/8	8	4	19 3/4	15 1/4	72	20	32 1/2	40	21 1/2	17	84	14 1/2	34 1/2	61 1/2	40
6"	HT	2 3/8	11	10	5	23 5/8	17 1/2	84	13 1/2	31	40	22 3/4	17 1/8	96	19	32 1/2	69	40
* 8"	HT	3 1/2	11	10	5	20 5/8	13 1/2	84	13	30 1/2	40	19 3/8	12 1/2	96	19	32	68 1/2	40
* 8"	MT	3 1/2	11	10	5	20 5/8	13 1/2	84	19 1/2	34 1/2	46	29 7/8	23	120	25	44 1/2	84 1/2	46
* 10"	MT	12 1/4	19 3/4	10	5	23 3/4	14 7/8	96	19	34	46	26 1/2	17 5/8	120	25	44	84	46
12"	LT	7 5/8	19 3/4	19 3/4	9 7/8	33	21 1/4	120	20 1/2	35	50 1/2	35 1/4	23 1/2	144	28	48 1/2	91	50 1/2
14"	LT	7 5/8	19 3/4	19 3/4	9 7/8	30 1/8	17 3/8	120	20 1/2	35 1/2	51	32	19 1/4	144	28	48 1/2	91 1/2	51

* ALSO AVAILABLE IN STAINLESS STEEL

682023–

Appendix G: Distribution System Pump Calculations

APPENDIX G
DISTRIBUTION SYSTEM PUMP STATION DESIGN CALCULATIONS

Distribution system requirements are calculated depending on the scenario.

Average Year Scenario:

Distribution rates for the Average Year Scenario are based on the following assumptions:

- Distribution rates for the month of July
- Each park is irrigated six (6) days per week
- Each park is irrigated eight (8) hours per day from 10:00 P.M. to 6:00 A.M.

$$I.W.R. = \left(\frac{6.37\ \cancel{inches}}{July}\right)\left(\frac{1\ \cancel{foot}}{12\ \cancel{inches}}\right)\left(\frac{43{,}560\cancel{ft^2}}{1\ acre}\right)\left(\frac{7.481\ gal}{1\ \cancel{ft^3}}\right) = 172{,}984\frac{gal}{acre - July}$$

$$I.W.R. = \left(172{,}984\frac{gal}{acre - \cancel{July}}\right)\left(\frac{\cancel{July}}{31\ \cancel{days}}\right)\left(\frac{7\ \cancel{days}}{1\ \cancel{week}}\right)\left(\frac{1\ \cancel{week}}{6\ \cancel{days}}\right)\left(\frac{1\ \cancel{day}}{8\ \cancel{hours}}\right)\left(\frac{1\ \cancel{hour}}{60\ min}\right)$$

$$= \mathbf{13.6}\frac{\boldsymbol{gal}}{\boldsymbol{min - acre}}$$

Drought Year Scenario:

Distribution rates for the Drought Year Scenario are based on the following assumptions:

- Distribution rates for the month of July
- Each park is irrigated seven (7) days per week
- Each park is irrigated eight (8) hours per day from 10:00 P.M. to 6:00 A.M.

$$I.W.R. = \left(\frac{8.01\ \cancel{inches}}{July}\right)\left(\frac{1\ \cancel{foot}}{12\ \cancel{inches}}\right)\left(\frac{43{,}560\cancel{ft^2}}{1\ acre}\right)\left(\frac{7.481\ gal}{1\ \cancel{ft^3}}\right) = 217{,}520\frac{gal}{acre - July}$$

$$I.W.R. = \left(217{,}520\frac{gal}{acre - \cancel{July}}\right)\left(\frac{\cancel{July}}{31\ \cancel{days}}\right)\left(\frac{1\ \cancel{day}}{8\ \cancel{hours}}\right)\left(\frac{1\ \cancel{hour}}{60\ min}\right)$$

$$= \mathbf{14.6}\frac{\boldsymbol{gal}}{\boldsymbol{min - acre}}$$

Public Works Scenario:

This scenario is not recommended as stated in Section 1.6. These calculations were performed to show that the flow requirements for this scenario could be met with some slight modifications to the distribution pump station.

Distribution rates for the Public Works Scenario are based on the following assumptions:

- Distribution rates for the month of July
- Each park is irrigated seven (7) days per week
- Each park is irrigated nine (9) hours per day from 9:00 P.M. to 6:00 A.M.

$$I.W.R. = \left(\frac{8.86\ \cancel{inches}}{July}\right)\left(\frac{1\ \cancel{foot}}{12\ \cancel{inches}}\right)\left(\frac{43{,}560\cancel{ft^2}}{1\ acre}\right)\left(\frac{7.481\ gal}{1\ \cancel{ft^3}}\right) = 240{,}602\frac{gal}{acre - July}$$

$$I.W.R. = \left(240{,}602\frac{gal}{acre - \cancel{July}}\right)\left(\frac{\cancel{July}}{31\ \cancel{days}}\right)\left(\frac{1\ \cancel{day}}{9\ \cancel{hours}}\right)\left(\frac{1\ \cancel{hour}}{60\ min}\right)$$

$$= \mathbf{14.4}\frac{\boldsymbol{gal}}{\boldsymbol{min - acre}}$$

TABLE G1
DISTRIBUTION SUMMARY
PRIORITY 1-3 PARKS

Park I.D.	Park Description	Priority	Irrigated Area (acres)	Priority 1 Park Distribution Rates			Priority 2 Park Distribution Rates			Priority 3 Park Distribution Rates			Priority 1 -3 Park Distribution Rates		
				Average Year[1] (gal/min)	Drought Year[2] (gal/min)	P. W. Scenario[3] (gal/min)	Average Year[1] (gal/min)	Drought Year[2] (gal/min)	P. W. Scenario[3] (gal/min)	Average Year[1] (gal/min)	Drought Year[2] (gal/min)	P. W. Scenario[3] (gal/min)	Average Year[1] (gal/min)	Drought Year[2] (gal/min)	P. W. Scenario[3] (gal/min)
PA-1	AISIK'S MEADOW PARK	1	2.9	40.1	43.0	42.4	0.0	0.0	0.0	0.0	0.0	0.0	40.1	43.0	42.4
PA-2	BOOTH FARMS PARK	3	5.4	0.0	0.0	0.0	0.0	0.0	0.0	73.3	78.7	77.7	73.3	78.7	77.7
		3	2.1	0.0	0.0	0.0	0.0	0.0	0.0	28.6	30.7	30.2	28.6	30.7	30.2
PA-3	COMMUNITY PARK	2	20.5	0.0	0.0	0.0	278.5	298.9	294.8	0.0	0.0	0.0	278.5	298.9	294.8
PA-4	FIRESTONE CENTRAL PARK	1	23.0	313.0	336.0	331.4	0.0	0.0	0.0	0.0	0.0	0.0	313.0	336.0	331.4
		1	67.0	911.4	978.4	965.0	0.0	0.0	0.0	0.0	0.0	0.0	911.4	978.4	965.0
PA-5	FIRSESTONE REGIONAL PARK	2	24.5	0.0	0.0	0.0	332.5	357.0	352.1	0.0	0.0	0.0	332.5	357.0	352.1
PA-6	FIRESTONE SPORTS COMPLEX	1	13.9	188.7	202.6	199.8	0.0	0.0	0.0	0.0	0.0	0.0	188.7	202.6	199.8
PA-7	HARNEY PARK	**2**	4.1	0.0	0.0	0.0	55.1	59.1	58.3	0.0	0.0	0.0	55.1	59.1	58.3
PA-8	HART PARK	3	5.9	0.0	0.0	0.0	0.0	0.0	0.0	79.6	85.4	84.2	79.6	85.4	84.2
PA-9	HART PARK EXPANSION	3	5.6	0.0	0.0	0.0	0.0	0.0	0.0	75.5	81.0	79.9	75.5	81.0	79.9
PA-10	MOUNTAIN SHADOWS PARK	3	12.8	0.0	0.0	0.0	0.0	0.0	0.0	173.4	186.2	183.6	173.4	186.2	183.6
PA-11	NEIGHBORS POINT PARK	3	16.7	0.0	0.0	0.0	0.0	0.0	0.0	227.5	244.2	240.8	227.5	244.2	240.8
PA-12	PATTERSON PARK	3	2.6	0.0	0.0	0.0	0.0	0.0	0.0	34.7	37.2	36.7	34.7	37.2	36.7
PA-13	PRAIRIE RIDGE PARK	3	3.8	0.0	0.0	0.0	0.0	0.0	0.0	52.0	55.8	55.1	52.0	55.8	55.1
PA-14	SADDLEBACK HEIGHTS PARK	2	2.0	0.0	0.0	0.0	27.5	29.6	29.2	0.0	0.0	0.0	27.5	29.6	29.2
PA-15	SADDLEBACK PARK	3	4.3	0.0	0.0	0.0	0.0	0.0	0.0	58.1	62.4	61.6	58.1	62.4	61.6
PA-16	SAGEBRUSH PARK	3	4.3	0.0	0.0	0.0	0.0	0.0	0.0	58.1	62.4	61.6	58.1	62.4	61.6
PA-17	STONERIDGE PARK	3	8.9	0.0	0.0	0.0	0.0	0.0	0.0	121.4	130.3	128.5	121.4	130.3	128.5
PA-18	SABLE GLEN PARK	3	11.5	0.0	0.0	0.0	0.0	0.0	0.0	156.1	167.5	165.2	156.1	167.5	165.2
			TOTAL	**1,453.1**	**1,560.0**	**1,538.6**	**693.6**	**744.6**	**734.4**	**1,138.2**	**1,221.9**	**1,205.2**	**3,284.9**	**3,526.5**	**3,478.2**

Notes:

[1]based on average year distribution rate of 13.6 (gal/min-acre)
[2]based on drought year distribution rate of 14.6 (gal/min-acre)
[3]based on Public Works distribution rate of 14.4 (gal/min-acre)

TABLE G2
DISTRIBUTION SYSTEM DEMAND SUMMARY
PRIORITY 1-3 PARKS

Demand Node		Park Information		Priority 1-3 Park Distribution Rates		
I.D.	Elevation (feet)	I.D.	Description	Average Year[1] (gal/min)	Drought Year[2] (gal/min)	P. W. Scenario[3] (gal/min)
J-1	4910	PA-1	AISIK'S MEADOW PARK	40.1	43.0	42.4
J-2	4890	PA-2	BOOTH FARMS PARK	73.3	78.7	77.7
				28.6	30.7	30.2
J-3	4990	PA-3	COMMUNITY PARK	278.5	298.9	294.8
J-4	4920	PA-4	FIRESTONE CENTRAL PARK	313.0	336.0	331.4
				911.4	978.4	965.0
J-5	4900	PA-5	FIRSESTONE REGIONAL PARK	332.5	357.0	352.1
J-6	4880	PA-6	FIRESTONE SPORTS COMPLEX	188.7	202.6	199.8
J-7	4900	PA-7	HARNEY PARK	55.1	59.1	58.3
J-8	5000	PA-8	HART PARK	79.6	85.4	84.2
		PA-9	HART PARK EXPANSION	75.5	81.0	79.9
J-10	4840	PA-10	MOUNTAIN SHADOWS PARK	173.4	186.2	183.6
J-11	4900	PA-11	NEIGHBORS POINT PARK	227.5	244.2	240.8
J-12	4920	PA-12	PATTERSON PARK	34.7	37.2	36.7
J-13	4910	PA-13	PRAIRIE RIDGE PARK	52.0	55.8	55.1
J-14	4970	PA-14	SADDLEBACK HEIGHTS PARK	27.5	29.6	29.2
J-15	4930	PA-15	SADDLEBACK PARK	58.1	62.4	61.6
J-16	4890	PA-16	SAGEBRUSH PARK	58.1	62.4	61.6
J-17	4920	PA-17	STONERIDGE PARK	121.4	130.3	128.5
J-18	4880	PA-18	SABLE GLEN PARK	156.1	167.5	165.2
			TOTAL	**3,284.9**	**3,526.5**	**3,478.2**

Notes:

[1]based on average year distribution rate from Table G1

[2]based on drought year distribution rate from Table G1

[3]based on Public Works distribution rate from Table G1

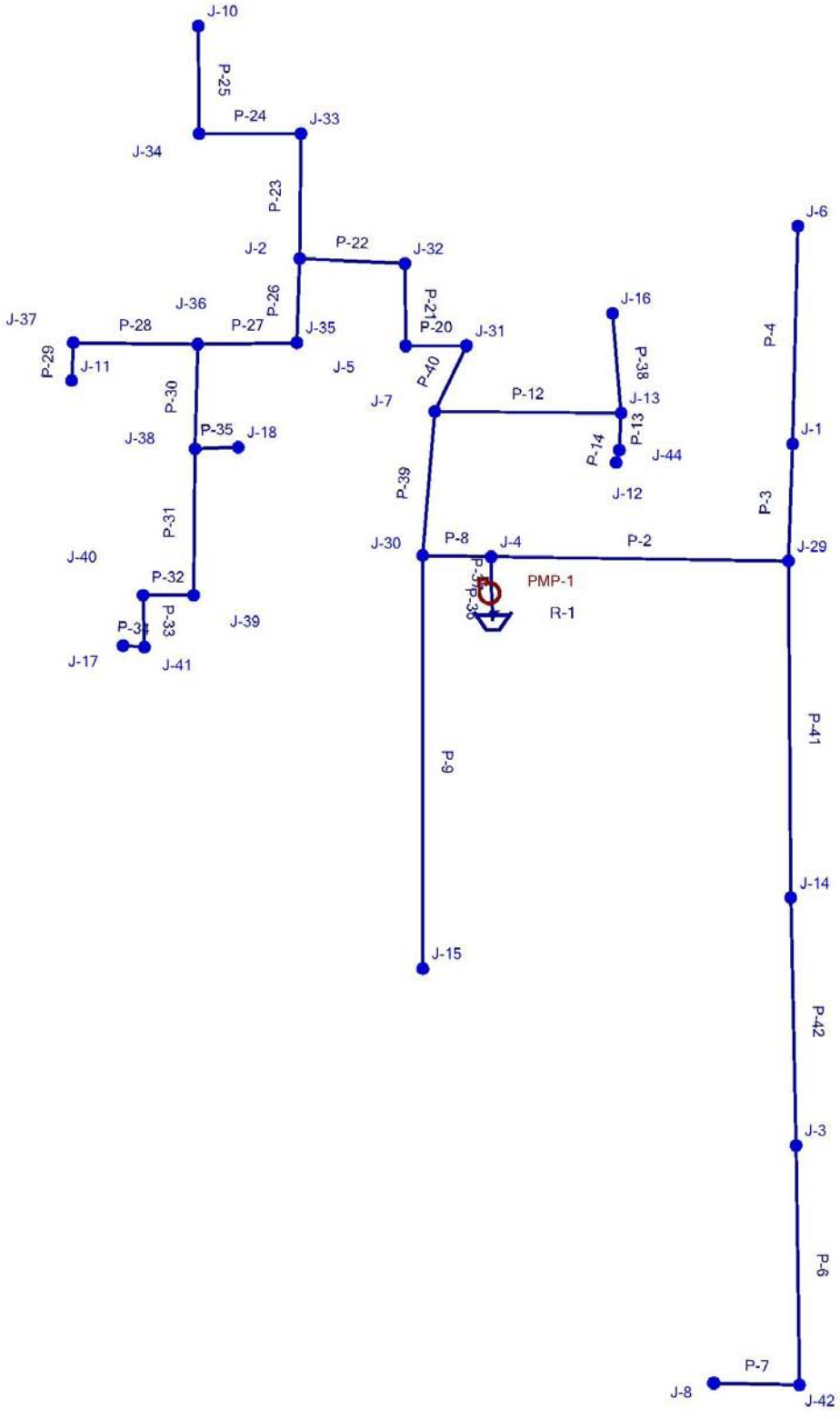

PROJECT:	CENTRAL PARK POND FIGURES
DESIGNED:	C.E.M.
CHECKED:	D.B.L.
JOB NO.:	0000.00.00
SCALE:	N.T.S.
DATE:	DECEMBER 2000

SHEET NO.: 1 OF 1

TOWN OF FIRESTONE
RAW WATER IRRIGATION SYSTEM MASTER PLAN

FIGURE G1 - DISTRIBUTION SYSTEM MODEL

CCG COLORADO CIVIL GROUP, INC.
ENGINEERING CONSULTANTS

TABLE G3
DISTRIBUTION SYSTEM MODEL RESULTS
AVERAGE YEAR SCENARIO
JUNCTION INFORMATION

Id	Label	Elevation (feet)	Demand (gpm)	Hydraulic (feet)	Pressure (psi)
29	J-8	5,000.00	155.1	5,189.40	81.9
69	J-42	5,000.00	0	5,191.90	83
24	J-3	4,990.00	278.5	5,199.10	90.5
116	J-14	4,970.00	27.5	5,211.40	104.5
36	J-17	4,920.00	121.4	5,171.60	108.8
62	J-41	4,920.00	0	5,172.00	109
61	J-40	4,900.00	0	5,173.00	118.1
31	J-11	4,900.00	227.5	5,176.10	119.4
32	J-12	4,920.00	34.7	5,202.10	122
78	J-44	4,920.00	0	5,202.10	122.1
34	J-15	4,930.00	58.1	5,212.90	122.4
60	J-39	4,890.00	0	5,174.00	122.9
59	J-38	4,890.00	0	5,176.80	124.1
33	J-13	4,910.00	52	5,202.20	126.4
50	J-29	4,920.00	0	5,214.00	127.2
37	J-18	4,880.00	156.1	5,175.50	127.8
22	J-1	4,910.00	40.1	5,206.80	128.4
58	J-37	4,880.00	0	5,178.30	129.1
25	J-4	4,920.00	1,224.40	5,218.90	129.3
26	J-5	4,900.00	332.50	5,201.90	130.6
52	J-31	4,900.00	0	5,204.30	131.6
57	J-36	4,880.00	0	5,185.90	132.4
28	J-7	4,900.00	55.1	5,207.10	132.9
23	J-2	4,890.00	101.9	5,198.00	133.3
53	J-32	4,890.00	0	5,200.20	134.2
35	J-16	4,890.00	58.1	5,201.70	134.9
51	J-30	4,900.00	0	5,214.90	136.2
27	J-6	4,880.00	188.7	5,197.40	137.3
56	J-35	4,860.00	0	5,192.40	143.8
55	J-34	4,850.00	0	5,189.60	146.9
54	J-33	4,850.00	0	5,193.40	148.6
30	J-10	4,840.00	173.4	5,185.70	149.6

TABLE G4
DISTRIBUTION SYSTEM MODEL RESULTS
AVERAGE YEAR SCENARIO
PIPE INFORMATION

Label	Length (feet)	Start Node	Stop Node	Diameter[1] (inches)	Flow (gpm)	Velocity (ft/s)	Headloss (feet)
P-36	383	63: R-1	105: PMP-1	18	3,285.10	4.14	1.22
P-37	442	105: PMP-1	25: J-4	18	3,285.10	4.14	1.41
P-8	877	25: J-4	51: J-30	12	1,370.80	3.89	3.99
P-39	1,852	51: J-30	28: J-7	12	1,312.70	3.72	7.77
P-26	1,080	23: J-2	56: J-35	8	505.00	3.22	5.57
P-27	1,261	56: J-35	57: J-36	8	505.00	3.22	6.5
P-20	778	52: J-31	26: J-5	12	1,112.80	3.16	2.4
P-40	927	28: J-7	52: J-31	12	1,112.80	3.16	2.86
P-30	1,331	57: J-36	59: J-38	6	277.50	3.15	9.19
P-42	3,164	116: J-14	24: J-3	8	433.60	2.77	12.3
P-3	1,501	50: J-29	22: J-1	6	228.8	2.6	7.25
P-28	1,594	57: J-36	58: J-37	6	227.5	2.58	7.62
P-29	475	58: J-37	31: J-11	6	227.5	2.58	2.27
P-21	1,053	26: J-5	53: J-32	12	780.3	2.21	1.69
P-22	1,348	53: J-32	23: J-2	12	780.3	2.21	2.16
P-4	2,781	22: J-1	27: J-6	6	188.7	2.14	9.4
P-23	1,600	23: J-2	54: J-33	6	173.4	1.97	4.63
P-24	1,296	54: J-33	55: J-34	6	173.4	1.97	3.75
P-25	1,377	55: J-34	30: J-10	6	173.4	1.97	3.98
P-2	3,799	25: J-4	50: J-29	12	689.9	1.96	4.84
P-35	545	59: J-38	37: J-18	6	156.1	1.77	1.3
P-6	3,066	24: J-3	69: J-42	6	155.1	1.76	7.21
P-7	1,094	69: J-42	29: J-8	6	155.1	1.76	2.57
P-12	2,386	28: J-7	33: J-13	6	144.8	1.64	4.94
P-31	1,874	59: J-38	60: J-39	6	121.4	1.38	2.8
P-32	648	60: J-39	61: J-40	6	121.4	1.38	0.97
P-33	666	61: J-40	62: J-41	6	121.4	1.38	0.99
P-34	275	62: J-41	36: J-17	6	121.4	1.38	0.41
P-41	4,313	50: J-29	116: J-14	12	461.1	1.31	2.61
P-9	5,291	51: J-30	34: J-15	6	58.1	0.66	2.02
P-38	1,274	33: J-13	35: J-16	6	58.1	0.66	0.49
P-13	475	33: J-13	78: J-44	6	34.7	0.39	0.07
P-14	166	78: J-44	32: J-12	6	34.7	0.39	0.02

Notes:

[1]pipe modeled as PVC with a Hazen-Williams C value of 130

TABLE G5
DISTRIBUTION SYSTEM MODEL RESULTS
DROUGHT-YEAR SCENARIO
JUNCTION INFORMATION

Id	Label	Elevation (feet)	Demand (gpm)	Hydraulic (feet)	Pressure (psi)
29	J-8	5,000.00	166.4	5,163.40	70.7
69	J-42	5,000.00	0	5,166.30	72
24	J-3	4,990.00	298.9	5,174.50	79.8
116	J-14	4,970.00	29.6	5,188.60	94.6
36	J-17	4,920.00	130.3	5,161.60	104.5
62	J-41	4,920.00	0	5,162.00	104.7
61	J-40	4,900.00	0	5,163.20	113.9
31	J-11	4,900.00	244.2	5,166.70	115.4
60	J-39	4,890.00	0	5,164.30	118.7
32	J-12	4,920.00	37.2	5,196.30	119.6
78	J-44	4,920.00	0	5,196.40	119.6
59	J-38	4,890.00	0	5,167.50	120
34	J-15	4,930.00	62.4	5,208.60	120.6
37	J-18	4,880.00	167.5	5,166.00	123.7
33	J-13	4,910.00	55.8	5,196.50	123.9
58	J-37	4,880.00	0	5,169.30	125.1
50	J-29	4,920.00	0	5,210.00	125.5
22	J-1	4,910.00	43	5,201.70	126.2
25	J-4	4,920.00	1,314.40	5,215.50	127.8
26	J-5	4,900.00	357	5,196.10	128.1
57	J-36	4,880.00	0.00	5,177.90	128.9
52	J-31	4,900.00	0	5,198.80	129.3
23	J-2	4,890.00	109.4	5,191.70	130.5
28	J-7	4,900.00	59.1	5,202.10	130.7
53	J-32	4,890.00	0	5,194.20	131.6
35	J-16	4,890.00	62.4	5,195.90	132.3
51	J-30	4,900.00	0	5,210.90	134.5
27	J-6	4,880.00	202.6	5,191.00	134.5
56	J-35	4,860.00	0	5,185.40	140.8
55	J-34	4,850.00	0	5,182.10	143.7
54	J-33	4,850.00	0	5,186.40	145.6
30	J-10	4,840.00	186.2	5,177.60	146.1

TABLE G6
DISTRIBUTION SYSTEM MODEL RESULTS
DROUGHT YEAR SCENARIO
PIPE INFORMATION

Label	Scaled (feet)	Start Node	Stop Node	Diameter[1] (inches)	Flow (gpm)	Velocity (ft/s)	Headloss (feet)
P-36	383	63: R-1	105: PMP-1	18	3,526.40	4.45	1.39
P-37	442	105: PMP-1	25: J-4	18	3,526.40	4.45	1.60
P-8	877	25: J-4	51: J-30	12	1,471.50	4.17	4.55
P-39	1,852	51: J-30	28: J-7	12	1,409.10	4.00	8.86
P-26	1,080	23: J-2	56: J-35	8	542.00	3.46	6.34
P-27	1,261	56: J-35	57: J-36	8	542.00	3.46	7.41
P-20	778	52: J-31	26: J-5	12	1,194.60	3.39	2.74
P-40	927	28: J-7	52: J-31	12	1,194.60	3.39	3.27
P-30	1,331	57: J-36	59: J-38	6	297.80	3.38	10.48
P-41	4,313	50: J-29	116: J-14	8	494.90	3.16	21.41
P-42	3,164	116: J-14	24: J-3	8	465.3	2.97	14.01
P-3	1,501	50: J-29	22: J-1	6	245.6	2.79	8.26
P-28	1,594	57: J-36	58: J-37	6	244.2	2.77	8.69
P-29	475	58: J-37	31: J-11	6	244.2	2.77	2.59
P-21	1,053	26: J-5	53: J-32	12	837.6	2.38	1.92
P-22	1,348	53: J-32	23: J-2	12	837.6	2.38	2.46
P-4	2,781	22: J-1	27: J-6	6	202.6	2.30	10.72
P-23	1,600	23: J-2	54: J-33	6	186.2	2.11	5.28
P-24	1,296	54: J-33	55: J-34	6	186.2	2.11	4.27
P-25	1,377	55: J-34	30: J-10	6	186.2	2.11	4.54
P-2	3,799	25: J-4	50: J-29	12	740.5	2.10	5.52
P-35	545	59: J-38	37: J-18	6	167.5	1.90	1.48
P-6	3,066	24: J-3	69: J-42	6	166.4	1.89	8.21
P-7	1,094	69: J-42	29: J-8	6	166.4	1.89	2.93
P-12	2,386	28: J-7	33: J-13	6	155.4	1.76	5.63
P-31	1,874	59: J-38	60: J-39	6	130.3	1.48	3.19
P-32	648	60: J-39	61: J-40	6	130.3	1.48	1.10
P-33	666	61: J-40	62: J-41	6	130.3	1.48	1.13
P-34	275	62: J-41	36: J-17	6	130.3	1.48	0.47
P-9	5,291	51: J-30	34: J-15	6	62.4	0.71	2.30
P-38	1,274	33: J-13	35: J-16	6	62.4	0.71	0.56
P-13	475	33: J-13	78: J-44	6	37.2	0.42	0.08
P-14	166	78: J-44	32: J-12	6	37.2	0.42	0.03

Notes:

[1]pipe modeled as PVC with a Hazen-Williams C value of 130

TABLE G7
DISTRIBUTION SYSTEM MODEL RESULTS
PUBLIC WORKS SCENARIO
JUNCTION INFORMATION

Id	Label	Elevation (feet)	Demand (gpm)	Hydraulic (feet)	Pressure (psi)
29	J-8	5,000.00	164.1	5,175.50	75.9
69	J-42	5,000.00	0	5,178.40	77.2
24	J-3	4,990.00	294.8	5,186.40	85
116	J-14	4,970.00	29.2	5,200.00	99.5
36	J-17	4,920.00	128.5	5,155.70	102
62	J-41	4,920.00	0	5,156.20	102.2
61	J-40	4,900.00	0	5,157.30	111.3
31	J-11	4,900.00	240.8	5,160.70	112.8
60	J-39	4,890.00	0	5,158.40	116.1
32	J-12	4,920.00	36.7	5,189.60	116.7
78	J-44	4,920.00	0	5,189.60	116.7
59	J-38	4,890.00	0	5,161.50	117.5
34	J-15	4,930.00	61.6	5,201.60	117.5
33	J-13	4,910.00	55.1	5,189.70	121
37	J-18	4,880.00	165.2	5,160.00	121.2
50	J-29	4,920.00	0	5,202.90	122.4
58	J-37	4,880.00	0	5,163.20	122.5
22	J-1	4,910.00	42.4	5,194.90	123.2
25	J-4	4,920.00	1,296.40	5,208.30	124.7
26	J-5	4,900.00	352.1	5,189.40	125.2
57	J-36	4,880.00	0.00	5,171.70	126.2
52	J-31	4,900.00	0	5,192.00	126.3
23	J-2	4,890.00	107.9	5,185.10	127.7
28	J-7	4,900.00	58.3	5,195.20	127.7
53	J-32	4,890.00	0	5,187.50	128.7
35	J-16	4,890.00	61.6	5,189.20	129.4
51	J-30	4,900.00	0	5,203.90	131.5
27	J-6	4,880.00	199.8	5,184.40	131.7
56	J-35	4,860.00	0	5,178.90	138
55	J-34	4,850.00	0	5,175.80	141
54	J-33	4,850.00	0	5,180.00	142.8
30	J-10	4,840.00	183.6	5,171.40	143.4

TABLE G8
DISTRIBUTION SYSTEM MODEL RESULTS
PUBLIC WORKS SCENARIO
PIPE INFORMATION

Label	Length (feet)	Start Node	Stop Node	Diameter[1] (inches)	Flow (gpm)	Velocity (ft/s	Headloss (feet)
P-36	383	63: R-1	105: PMP-1	18	3,478.10	4.39	1.36
P-37	442	105: PMP-1	25: J-4	18	3,478.10	4.39	1.56
P-8	877	25: J-4	51: J-30	12	1,451.40	4.12	4.43
P-39	1,852	51: J-30	28: J-7	12	1,389.80	3.94	8.64
P-26	1,080	23: J-2	56: J-35	8	534.50	3.41	6.18
P-27	1,261	56: J-35	57: J-36	8	534.50	3.41	7.22
P-20	778	52: J-31	26: J-5	12	1,178.10	3.34	2.67
P-40	927	28: J-7	52: J-31	12	1,178.10	3.34	3.18
P-30	1,331	57: J-36	59: J-38	6	293.70	3.33	10.21
P-42	3,164	116: J-14	24: J-3	8	458.90	2.93	13.66
P-3	1,501	50: J-29	22: J-1	6	242.2	2.75	8.05
P-28	1,594	57: J-36	58: J-37	6	240.8	2.73	8.46
P-29	475	58: J-37	31: J-11	6	240.8	2.73	2.52
P-21	1,053	26: J-5	53: J-32	12	826	2.34	1.87
P-22	1,348	53: J-32	23: J-2	12	826	2.34	2.4
P-4	2,781	22: J-1	27: J-6	6	199.8	2.27	10.45
P-23	1,600	23: J-2	54: J-33	6	183.6	2.08	5.14
P-24	1,296	54: J-33	55: J-34	6	183.6	2.08	4.16
P-25	1,377	55: J-34	30: J-10	6	183.6	2.08	4.42
P-2	3,799	25: J-4	50: J-29	12	730.3	2.07	5.38
P-35	545	59: J-38	37: J-18	6	165.2	1.87	1.44
P-6	3,066	24: J-3	69: J-42	6	164.1	1.86	8
P-7	1,094	69: J-42	29: J-8	6	164.1	1.86	2.86
P-12	2,386	28: J-7	33: J-13	6	153.4	1.74	5.5
P-31	1,874	59: J-38	60: J-39	6	128.5	1.46	3.11
P-32	648	60: J-39	61: J-40	6	128.5	1.46	1.08
P-33	666	61: J-40	62: J-41	6	128.5	1.46	1.1
P-34	275	62: J-41	36: J-17	6	128.5	1.46	0.46
P-41	4,313	50: J-29	116: J-14	12	488.1	1.38	2.9
P-9	5,291	51: J-30	34: J-15	6	61.6	0.7	2.25
P-38	1,274	33: J-13	35: J-16	6	61.6	0.7	0.54
P-13	475	33: J-13	78: J-44	6	36.7	0.42	0.08
P-14	166	78: J-44	32: J-12	6	36.7	0.42	0.03

Notes:

[1]pipe modeled as PVC with a Hazen-Williams C value of 130

LEE MATHEWS EQUIPMENT INC
SALES • SERVICE • RENTAL

To: Colorado Civil Group

Date: August 27, 2008

Att Mr. Chris Messersmith

Ref: Town of Firestone

QUANTITY	DESCRIPTION	PRICE

Distribution pumps

1800 gpm @ 300' tdh

1 Aurora Pump /Layne Vertiline vertical turbine pump consisting of:

14RL 4 stage cast iron/bronze fitted bowl assembly with bronze bowl and impeller wear rings

200 HP 1770 rpm 460/3/60 vertical hollow shaft motor, WP-1 enclosure, Non-reverse ratchet,

The appropriate length of 10" column pipe and 1 11/16" lineshaft, stainless steel lineshaft sleeves, product lubricated, threaded column in maximum section lengths of 5'

Galvanized steel basket strainer

6345 DOWNING · DENVER, CO 80216
303/ 227- 1002 · FAX 303 / 227-1004

Model 10" x 16.5 discharge head, with 10" 150# discharge flange, 2 piece head shaft, stuffing box, sealed with packing

YOUR TOTAL NET PRICE ----------$24, 913.00 each

TERMS: Net 30 days with approved credit

SUBMITTAL DATA: approx.2 weeks

DELIVERY AFTER APPROVAL: approx. 12 weeks

FREIGHT: FOB Factory with freight charges to the jobsite included.

QUOTATION VALID: 30 days

Lee Mathews Equipment-Denver

Peter Green

Company: LEE MATHEW EQUIPMENT-DENVER
Name: CITY OF FIRESTONE DISTR. PUMPS
Date: 8/27/2008

Layne/Verti-Line
Pentair Water

Pump

Size: 14RL (4 stage)

Type: Vertical Turbine
Synch speed: 1800 rpm

Speed: 1770 rpm
Dia: 11.1875 in

Curve:

Impeller:

Specific Speeds:

Ns: —
Nss: —

Dimensions:

Suction: 10 in
Discharge: — in

Vertical Turbine:

Bowl size: 14.25 in
Max lateral: — in
Thrust K factor: 15.5 lb/ft

Search Criteria

Flow: 1800 US gpm

Head: 300 ft

Fluid

Water
Density: 62.25 lb/ft³
Viscosity: 1.105 cP

Temperature: 60 °F
Vapor pressure: 0.2563 psi a
Atm pressure: 14.7 psi a

NPSHa: — ft

Motor

Standard: NEMA
Enclosure: TEFC

Size: 200 hp
Speed: 1800
Frame: 447T

Sizing criteria: Max Power on Design Curve

Pump Limits

Temperature: 150 °F
Pressure: 400 psi g
Sphere size: 1.25 in

Power: — hp
Eye area: 41.2 in²

Data Point

Flow:	1800 US gpm
Head:	302 ft
Eff:	83.2%
Power:	165 hp
NPSHr:	12.4 ft

Design Curve

Cutoff head:	524 ft
Cutoff dP:	227 psi
Min flow:	— US gpm

BEP: 83.8% @ 1893 US gpm

NOL power:
168 hp @ 1209 US gpm

Max Curve

Max power:
185 hp @ 1209 US gpm

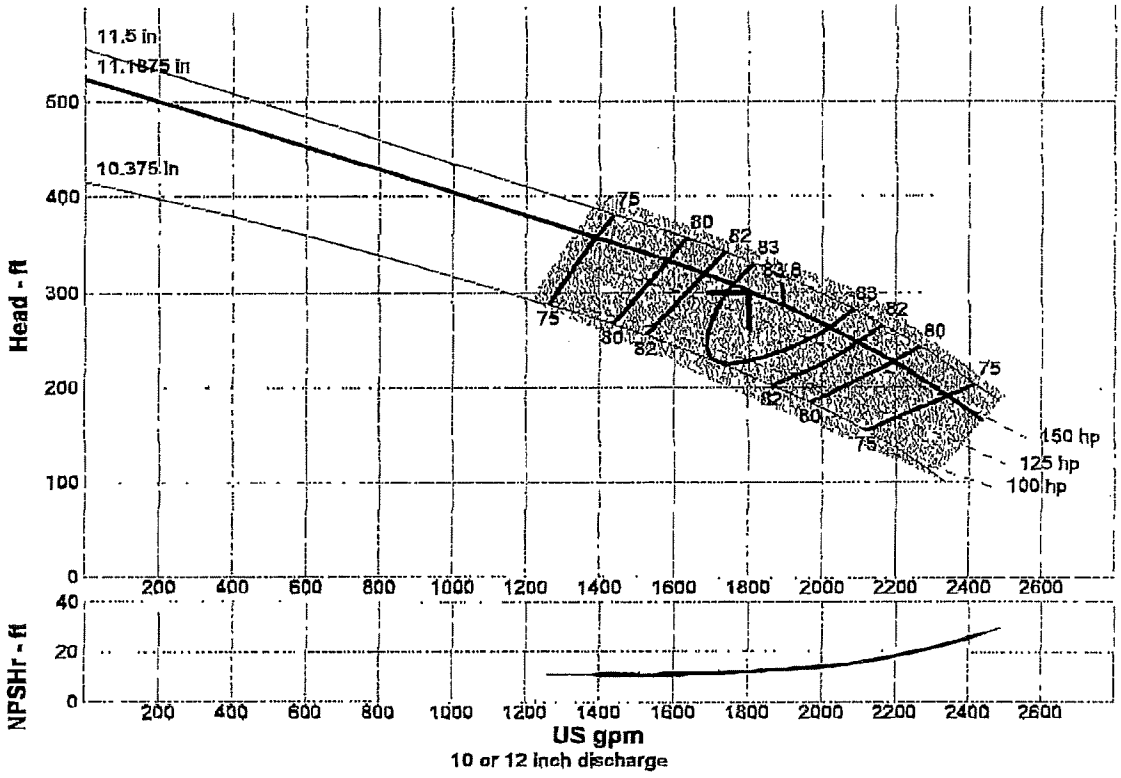

Performance Evaluation

Flow US gpm	Speed rpm	Head ft	Efficiency %	Power hp	NPSHr ft
2160	1770	234	80.6	158	17.5
1800	1770	302	83.2	165	12.4
1440	1770	351	76.3	167	11.1
1080	1770	—	—	—	—
720	1770	—	—	—	—

Selected from catalog: Layne-Vertiline.60 Vers: 1

⚠ WARNING

DO NOT OPERATE THIS MACHINE WITHOUT PROTECTIVE GUARD IN PLACE. ANY OPERATION OF THIS MACHINE WITHOUT PROTECTIVE GUARD CAN RESULT IN SEVERE BODILY INJURY.

DISCHARGE HEAD DIMENSIONS								
HEAD SIZE	A	B	C	F	H	S	T	U
16½ x 6	23	11⅜	10	1⅜	⅞	24	21	17⅛
16½ x 8	23	11⅜	10	1⅜	⅞	24	21	17⅛
16½ X 10	23	13⅞	10½	1⅜	⅞	24	21	17⅛
20 X 12	23	17¼	12 7/16	1 5/16	1	29	24	21⅜

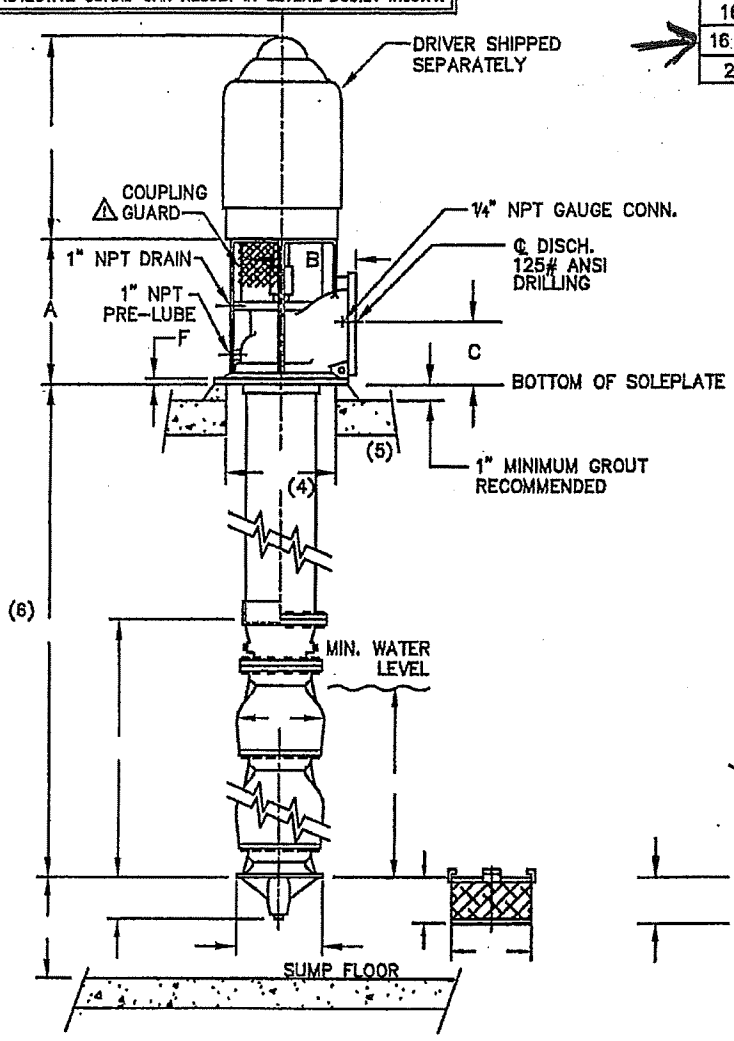

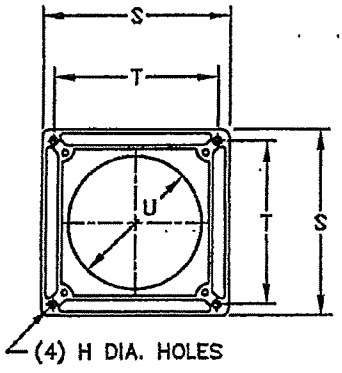

BOTTOM VIEW OF FOUNDATION PLATE

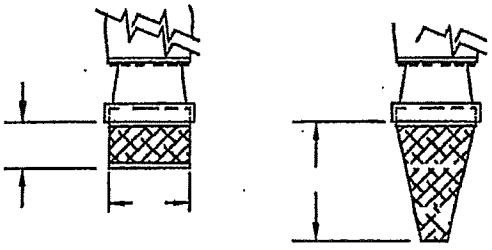

1. THIS DRAWING NOT FOR CONSTRUCTION OR INSTALLATION UNLESS CERTIFIED. DIMENSIONS SHOWN ARE TYPICAL AND MAY VARY DUE TO VARIOUS TOLERANCES.
2. FOUNDATION PLATE MUST BE SUPPORTED ON ALL FOUR (4) SIDES AND GROUTED IN PLACE.
3. MINIMUM SUBMERGENCE REQUIRED AT MAXIMUM FLOW.
4. MINIMUM DIAMETER REQUIRED TO REMOVE BOWL ASSEMBLY
5. DETAIL SHOWN FOR ILLUSTRATION ONLY AND IS NOT INTENDED TO REPRESENT THE ACTUAL INSTALLATION.
6. CUSTOMER TO VERIFY OR ADVISE OVERALL LENGTH PRIOR TO OR AT RELEASE.

CUSTOMER				P.O.		
JOB NAME						
PUMP SIZE & MODEL	STAGES	GPM	TDH	RPM	ROT CCW	
MOTOR	HP	FRAME	PHASE	HERTZ	VOLTS	ENCL
CERTIFIED FOR	CERTIFIED BY		DATE			

Layne/Verti-Line
Pentair Water

SETTING PLAN
MODEL 1100 PUMP
TYPE "SDC" SURFACE HEAD
WITH FOUNDATION PLATE

DWG. NO. 1100FS001 REV 1