DRAWING NO.	TITLE
ST1A	PRINCIPAL ARTERIAL
ST1B	PRINCIPAL ARTERIAL
ST2A	MINOR ARTERIAL
ST2B	MINOR ARTERIAL
ST3	COLLECTORS
ST4	COLLECTORS
ST5	RURAL ARTERIAL
ST6	LOCAL STREETS
ST7	PAVEMENT PHASING – NEW ROADS
ST8	TRENCH & CURB PATCH
ST9	STRUCTURE PATCH
ST10A	GROUND MOUNT STREET NAME SIGN
ST10B	ROAD AND STREET NAME SIGNS
ST10C	PRIVATE STREET SIGN
ST11	CUL–DE–SAC
ST12	SIGHT DISTANCE
ST13	DRIVEWAY APPROACHES FOR ROADS
ST14	90 DEGREE TURN – LOCAL ACCESS STREETS
ST15A	4" PERFORATED UNDERDRAIN
ST15B	4" PERFORATED MEDIAN UNDERDRAIN FOR CENTER PLANTING
ST15C	4" PERFORATED MEDIAN UNDERDRAIN FOR EDGE PLANTING
ST16	UNDERDRAIN OUTLET TREATMENT
ST17	TYPICAL STREET UTILITY LOCATION

INDEX OF STREET DETAILS

FIRESTONE COLORADO	STREET CONSTRUCTION DRAWINGS	BY: JME	DRAWING:
		SCALE: NTS	
		DATE: 11/2019	

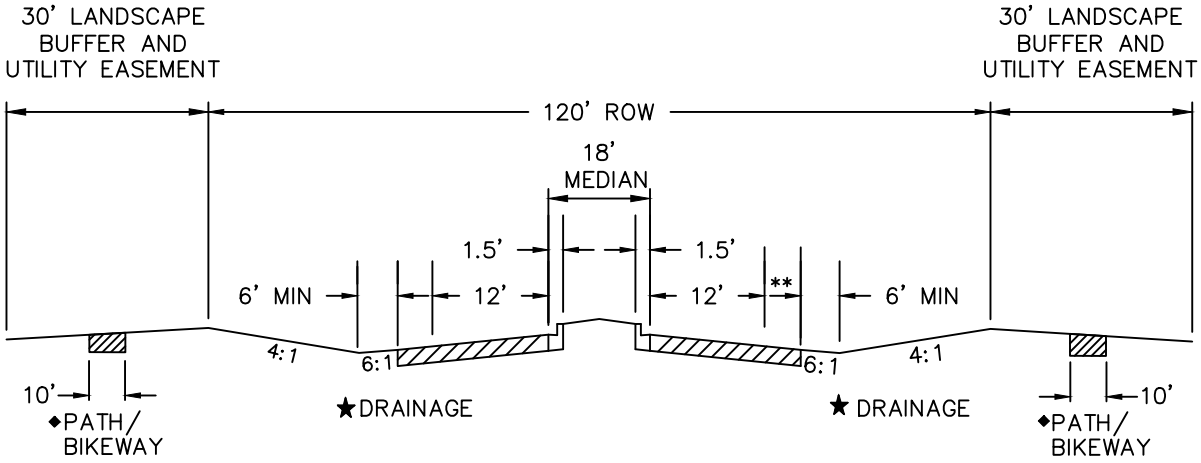

INITIAL PHASE

** 6' SHOULDER TO ACCOMMODATE BICYCLES

★ DRAINAGE DITCH TO BE ENGINEERED AT CROSS STREETS AND DRIVEWAYS

◆ PATH MAY BE LOCATED IN LANDSCAPE BUFFER OR WITHIN ROW AND SHOULD MEANDER.

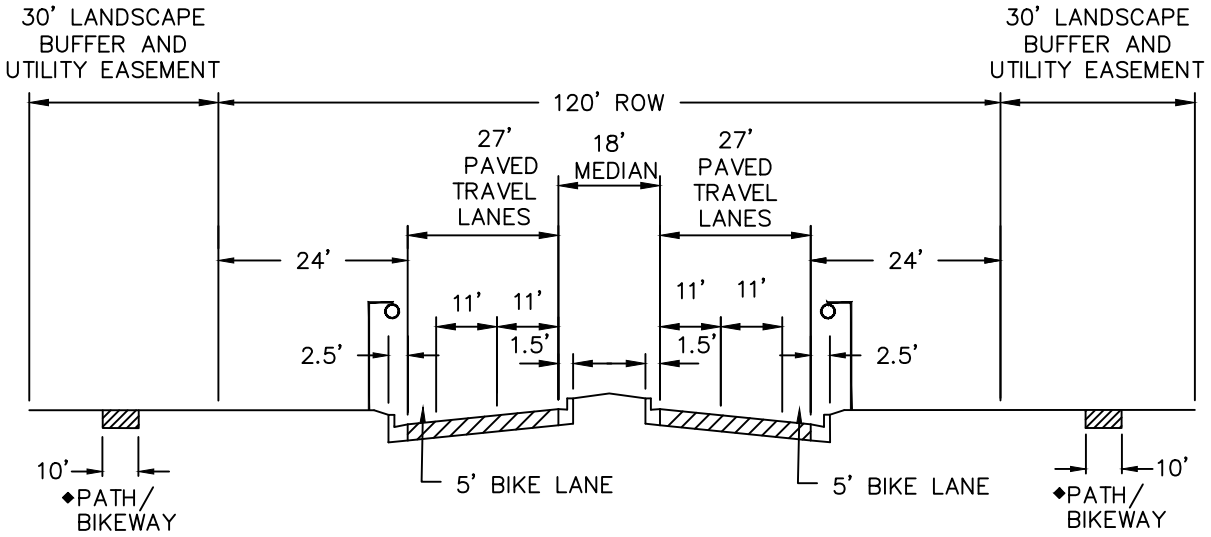

4–LANE PRINCIPAL ARTERIAL

◆PATH MAY BE LOCATED IN LANDSCAPE BUFFER OR WITHIN ROW AND SHOULD MEANDER.

PRINCIPAL ARTERIAL

FIRESTONE COLORADO	STREET CONSTRUCTION DRAWINGS	BY: JME SCALE: NTS DATE: 11/2019	DRAWING: ST1A

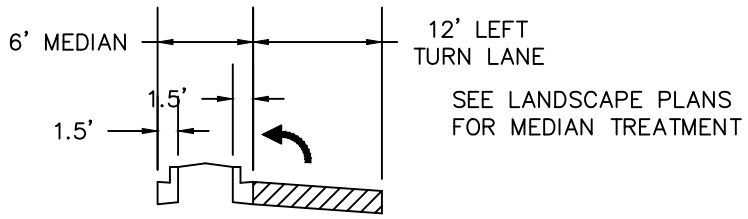

TYPICAL MEDIAN W/LEFT TURN LANE

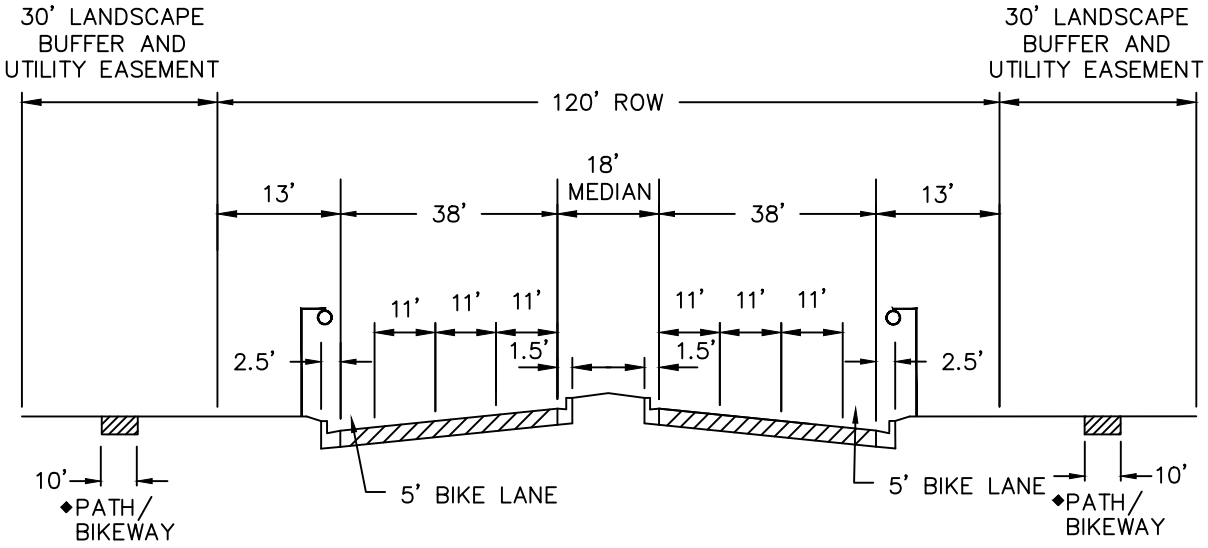

6–LANE PRINCIPAL ARTERIAL

◆ PATH MAY BE LOCATED IN LANDSCAPE BUFFER OR WITHIN ROW AND SHOULD MEANDER.

PRINCIPAL ARTERIAL

FIRESTONE COLORADO	STREET CONSTRUCTION DRAWINGS	BY: JME SCALE: NTS DATE: 11/2019	DRAWING: ST1B

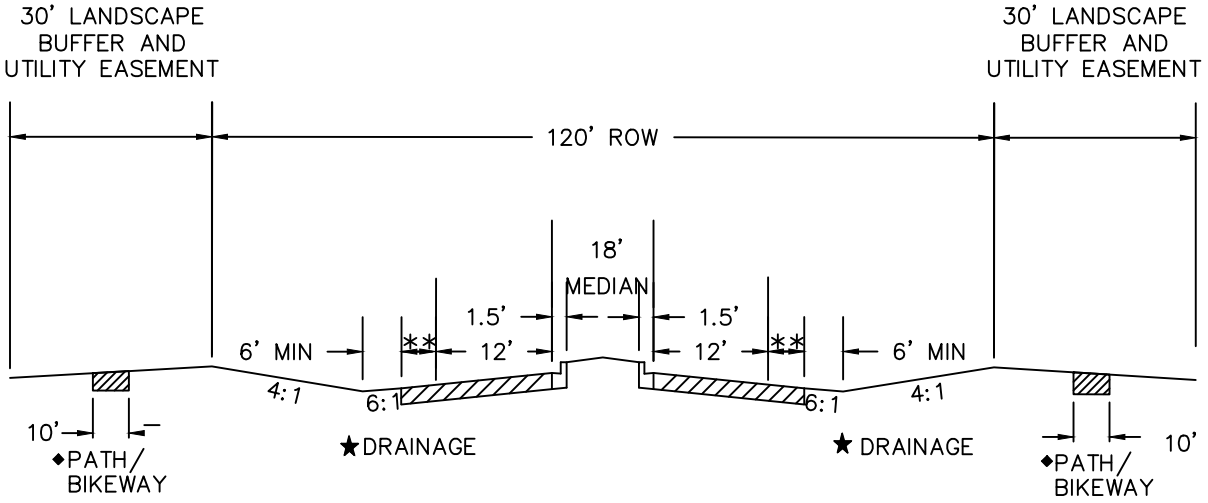

INITIAL PHASE

◆PATH MAY BE LOCATED IN LANDSCAPE BUFFER OR WITHIN ROW AND SHOULD MEANDER.

**6' SHOULDER TO ACCOMMODATE BICYCLES

★ DRAINAGE DITCH TO BE ENGINEERED AT CROSS STREETS AND DRIVEWAYS

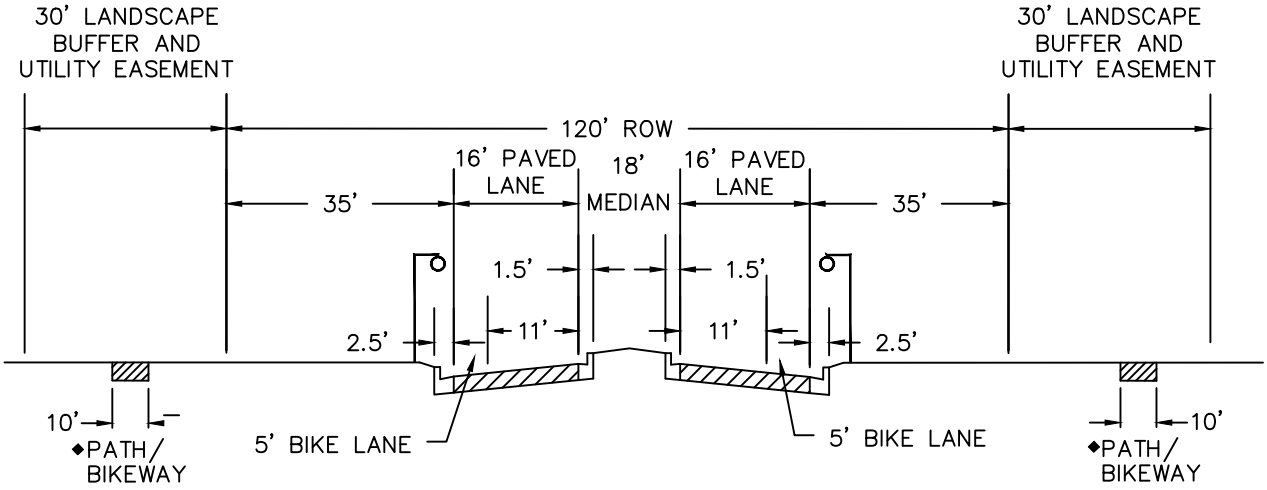

2–LANE MINOR ARTERIAL

◆PATH MAY BE LOCATED IN LANDSCAPE BUFFER OR WITHIN ROW AND SHOULD MEANDER.

MINOR ARTERIAL

FIRESTONE COLORADO	STREET CONSTRUCTION DRAWINGS	BY: JME SCALE: NTS DATE: 11/2019	DRAWING: ST2A

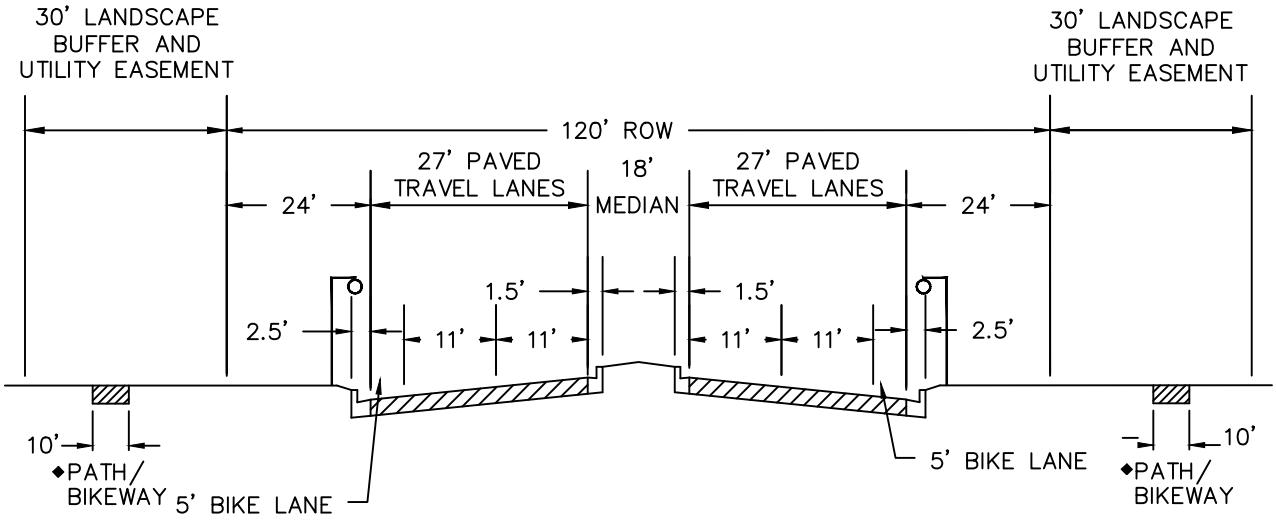

4–LANE MINOR ARTERIAL

◆PATH MAY BE LOCATED IN LANDSCAPE BUFFER OR WITHIN ROW AND SHOULD MEANDER.

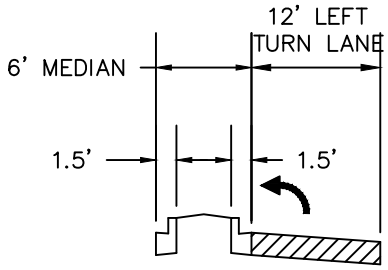

TYPICAL MEDIAN W/LEFT TURN LANE

MINOR ARTERIAL

FIRESTONE COLORADO	STREET CONSTRUCTION DRAWINGS	BY: JME SCALE: NTS DATE: 11/2019	DRAWING: ST2B

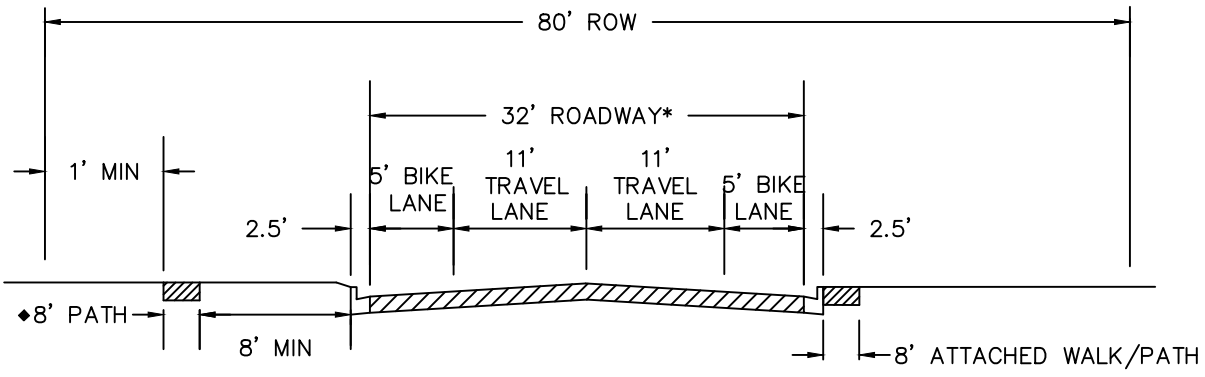

COLLECTOR WITHOUT PARKING OR MEDIAN

NOTE:

PRIVATE UTILITIES TO BE PLACED OUTSIDE OF THE PUBLIC RIGHT-OF-WAY
*TURN LANES WILL BE REQUIRED AS DETERMINED BY A TRAFFIC STUDY
◆PATH SHOULD MEANDER.

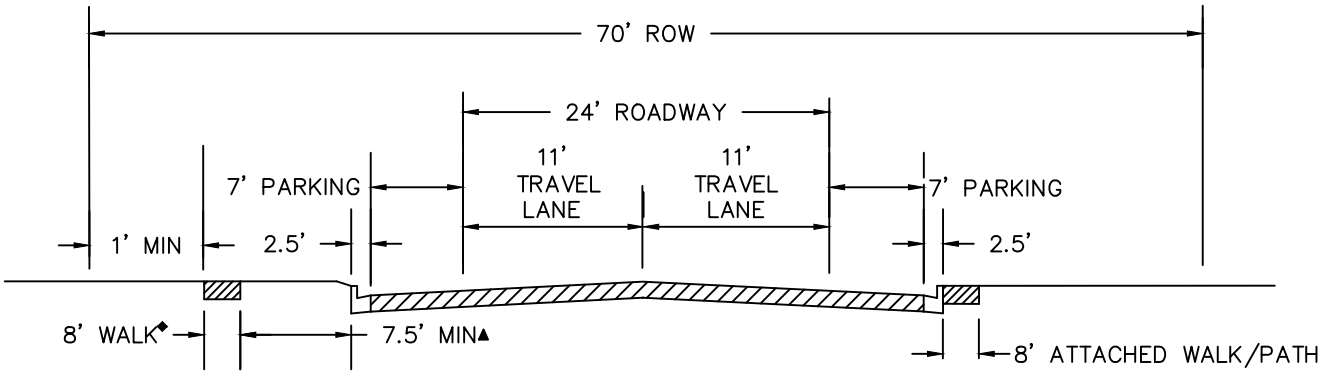

RESIDENTIAL COLLECTOR WITH ON-STREET PARKING
(TYPICAL VOLUME: UP TO 2,000 VPD)

▲8' MINIMUM IN MULTI-FAMILY DEVELOPMENT
◆PATH SHOULD MEANDER.

COLLECTORS

FIRESTONE COLORADO	STREET CONSTRUCTION DRAWINGS	BY: JME SCALE: NTS DATE: 11/2019	DRAWING: ST3

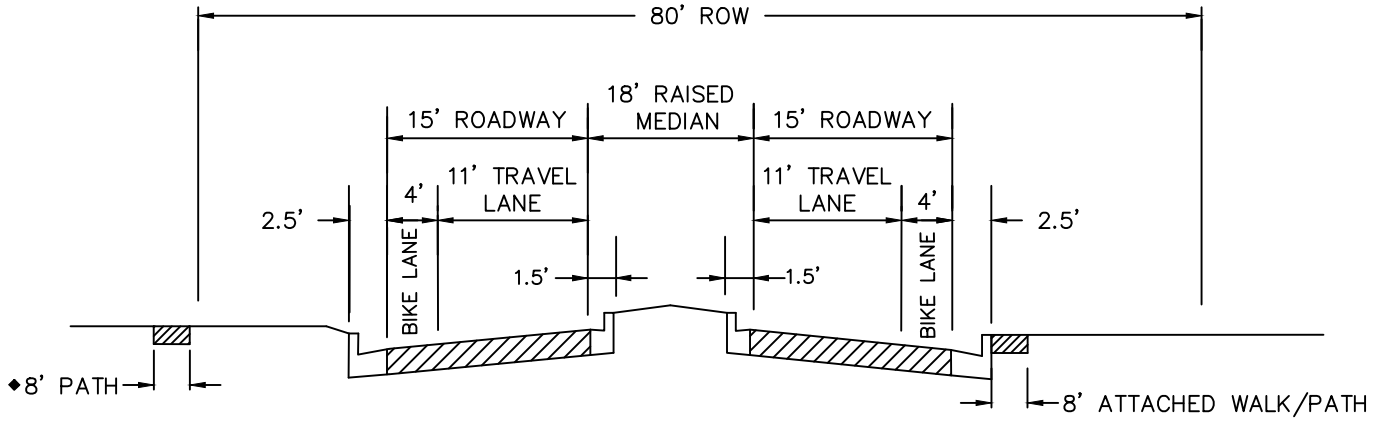

COLLECTOR WITH RAISED MEDIAN

NOTE:

PRIVATE UTILITIES TO BE PLACED OUTSIDE OF THE PUBLIC RIGHT-OF-WAY
◆PATH SHOULD MEANDER.

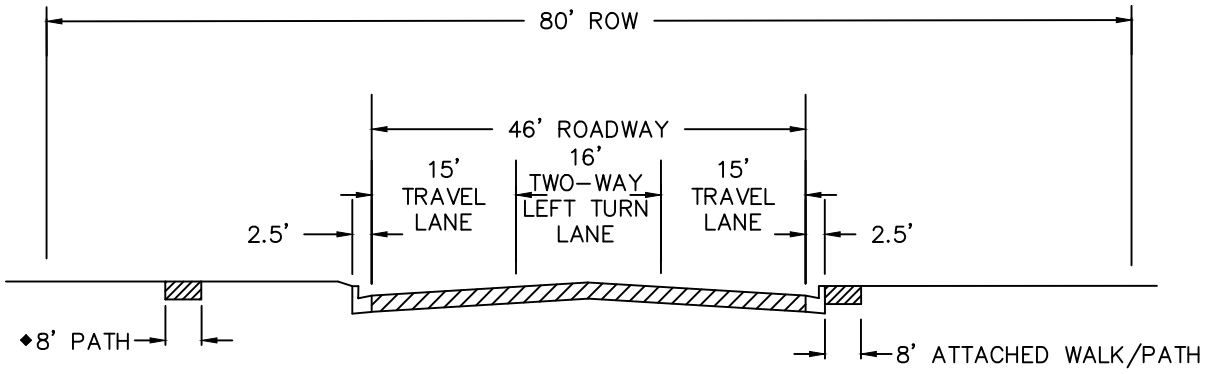

COLLECTOR WITH FLUSH MEDIAN
(INTENDED FOR INDUSTRIAL AREAS)

NOTE:

PRIVATE UTILITIES TO BE PLACED OUTSIDE OF THE PUBLIC RIGHT-OF-WAY
◆PATH SHOULD MEANDER.

COLLECTORS

FIRESTONE COLORADO	STREET CONSTRUCTION DRAWINGS	BY: JME SCALE: NTS DATE: 11/2019	DRAWING: ST4

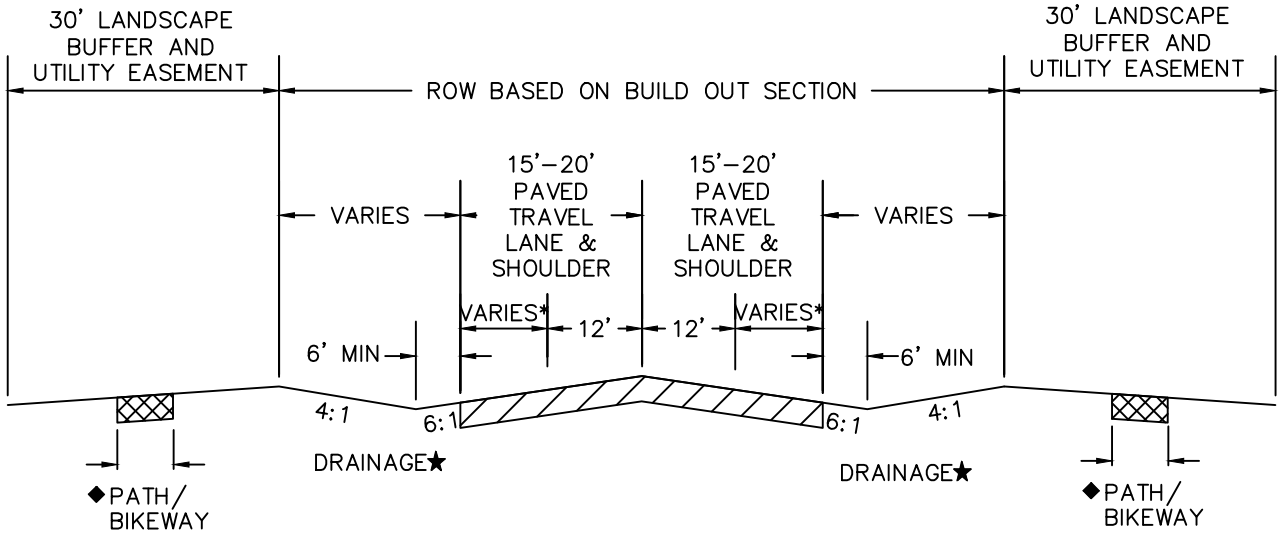

RURAL ARTERIAL

*BIKES CAN USE PAVED SHOULDERS

SHOULDER WIDTH VARIES DEPENDING ON DESIGN VOLUME:

- 4' WIDTH – UP TO 5,000 VPD
- 6' WIDTH – 5,000 TO 10,000 VPD
- 8' WIDTH –OVER 10,000 VPD

◆ PATH (5' TO 10') AT THE DISCRETION OF THE TOWN OF FIRESTONE. PATH SHOULD MEANDER.

★ DRAINAGE DITCH TO BE ENGINEERED AT CROSS STREETS AND DRIVEWAYS

RURAL ARTERIAL

FIRESTONE COLORADO	STREET CONSTRUCTION DRAWINGS	BY: JME SCALE: NTS DATE: 11/2019	DRAWING: ST5

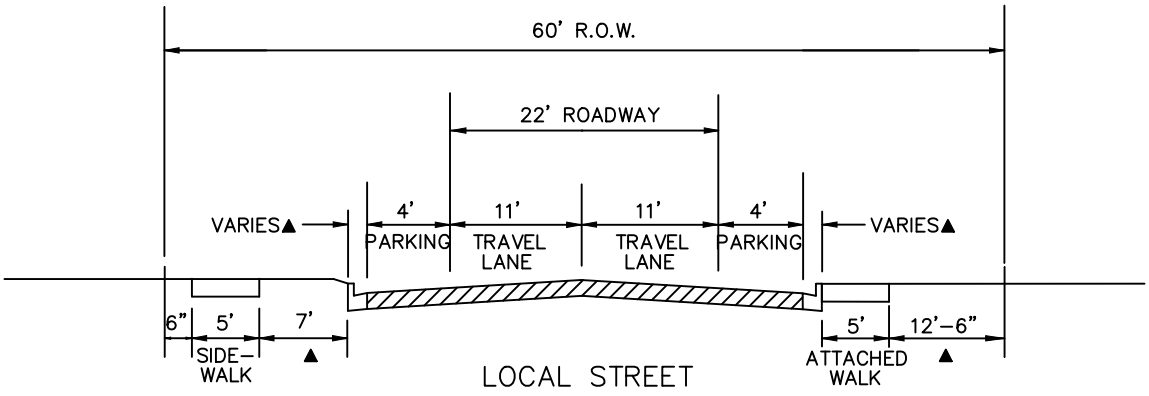

▲ WIDTH DEPENDS ON VERTICAL OR ROLLOVER CURB

NOTE:

1. PRIVATE UTILITY LINES TO BE OUTSIDE OF PUBLIC RIGHT-OF-WAY.

LOCAL STREETS

FIRESTONE COLORADO	STREET CONSTRUCTION DRAWINGS	BY: JME SCALE: NTS DATE: 11/2019	DRAWING: ST6

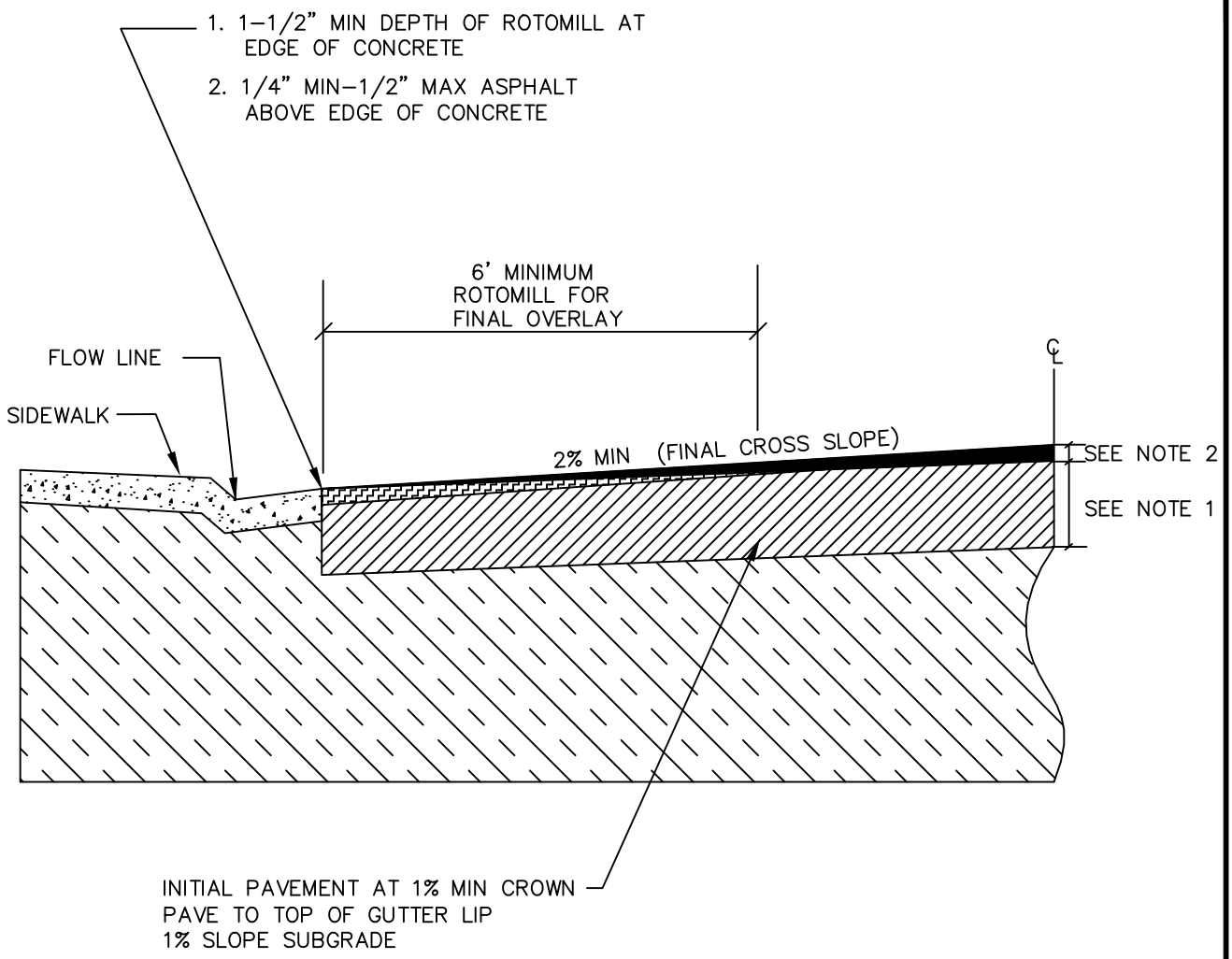

NOTES:

1. INITIAL PAVEMENT DEPTH AT CONSTRUCTION ACCEPTANCE SHALL BE FULL DESIGN DEPTH FOR THE ENTIRE WIDTH OF THE ROAD SECTION.
2. FINAL OVERLAY DEPTH AT FINAL ACCEPTANCE IS IN ADDITION TO THE DESIGN DEPTH. THE DEPTH WILL VARY DEPENDING UPON THE PAVEMENT WIDTH TO ENSURE A MINIMUM OF A 2% PAVEMENT CROSS SLOPE.
3. THE FINAL OVERLAY SHALL BE COMPLETED AT FINAL ACCEPTANCE WHICH IS AFTER THE END OF THE 2 YEAR WARRANTY PERIOD WHEN ALL FINAL PUNCH LIST REPAIRS ARE COMPLETE.
4. THE FINAL OVERLAY MUST BE SX MIX.
5. DETERMINATION OF CROWN FOR CUL DE SAC PAVING SHALL BE EVALUATED ON A CASE BY CASE BASIS.

PAVEMENT PHASING - NEW ROADS

FIRESTONE COLORADO	STREET CONSTRUCTION DRAWINGS	BY: JME SCALE: NTS DATE: 11/2019	DRAWING: ST7

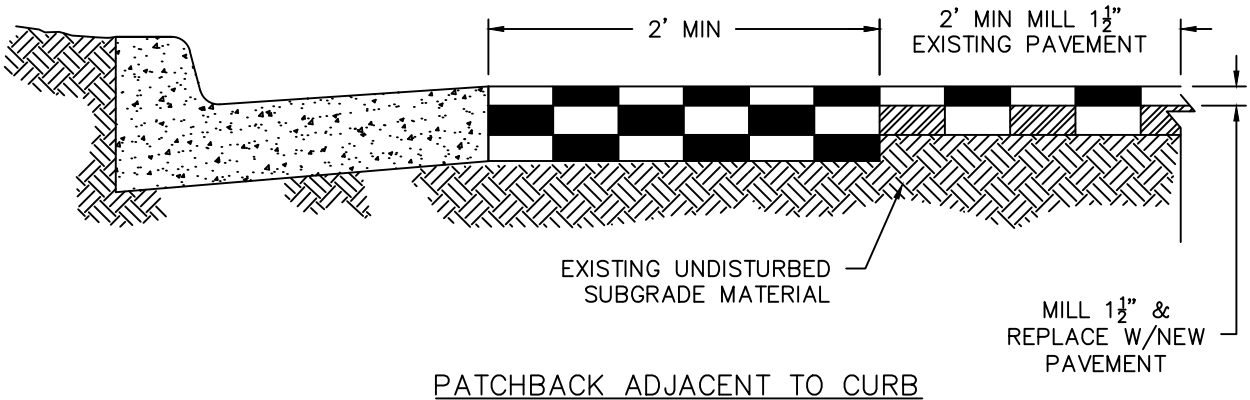

PATCHBACK ADJACENT TO CURB

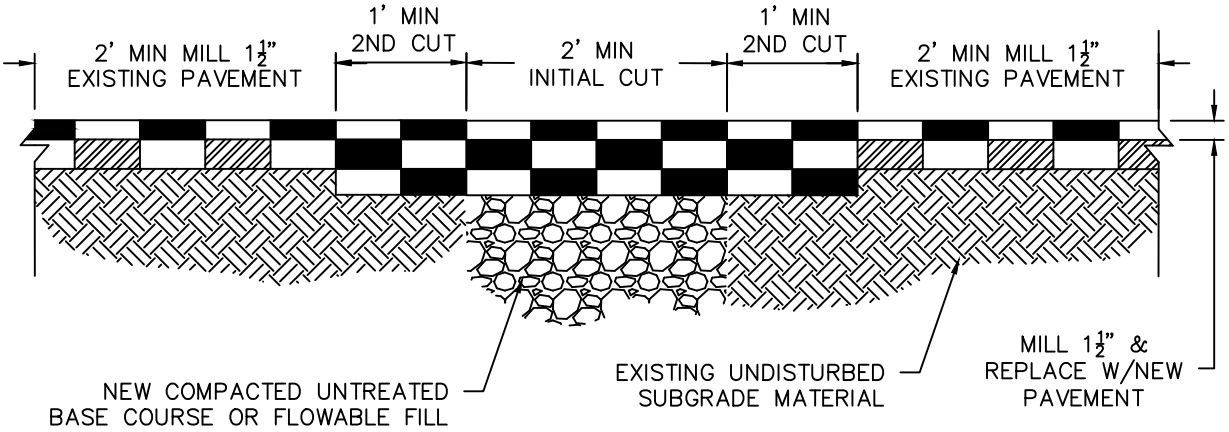

PATCHBACK FOR UTILITY AND SERVICE TRENCHES

NOTE:

1. IF ASPHALT PATCH THICKNESS IS NOT IDENTIFIED ON PLANS USE 6½" MIN ASPHALT PATCH OR EXISTING THICKNESS PLUS 1", WHICH EVER THICKNESS IS GREATER.
2. MINIMUM DEPTH OF WEARING COURSE SHALL BE 1½" AND SHALL BE GRADING SX ASPHALT.
3. MINIMUM DEPTH OF INTERMEDIATE COURSE SHALL BE 5" AND BE INSTALLED IN 2 LIFTS. INTERMEDIATE COURSE SHALL BE GRADING S OR G ASPHALT.
4. PATCH SHALL BE PLACED AND COMPACTED IN LIFTS A MAXIMUM OF 3" IN DEPTH.
5. APPLY SS-I TACK COAT TO EXISTING ASPHALT AND/OR CONCRETE VERTICAL SURFACES.
6. TRENCHES LESS THAN 2' IN WIDTH MUST RECEIVE PRIOR APPROVAL FROM THE TOWN OF FIRESTONE ENGINEERING DEPARTMENT AND SHALL BE FLOW-FILLED.
7. PROVIDE 28 DAY 60 PSI CONTROLLED LOW STRENGTH FLOWABLE FILL AS SPECIFIED. USE FILL THAT FLOWS EASILY AND VIBRATION IS NOT REQUIRED. CURE TO INITIAL SET BEFORE PLACING NEW UNTREATED BASE COURSE OR NEW ASPHALT PAVEMENT. USE FLOWABLE FILL IN EXCAVATIONS THAT ARE TOO NARROW TO RECEIVE COMPACTION EQUIPMENT.
8. REMOVE ADDITIONAL PAVEMENT TO A PAINTED LANE STRIPE, A LIP OF GUTTER, A CURB, AN EXISTING PAVEMENT PATCH, OR AN EDGE OF THE PAVEMENT IF SUCH STREET FEATURE IS WITHIN TWO FEET OF THE SECOND SAW CUT.
9. PROVIDE UNTREATED BASE COURSE MATERIAL. DO NOT USE GRAVEL OR WASHED ROCK. PLACE NEW MATERIAL IN LIFTS NOT EXCEEDING 8" AFTER COMPACTION. COMPACT TO A MODIFIED PROCTOR DENSITY OF 95% OR GREATER.
10. STRAIGHT SAWCUT OR BLADECUT THE EXISTING ASPHALT PAVEMENT WHEN JOINING WITH NEW ASPHALT PAVEMENT.

TRENCH & CURB PATCH

FIRESTONE COLORADO	STREET CONSTRUCTION DRAWINGS	BY: JME SCALE: NTS DATE: 11/2019	DRAWING: ST8

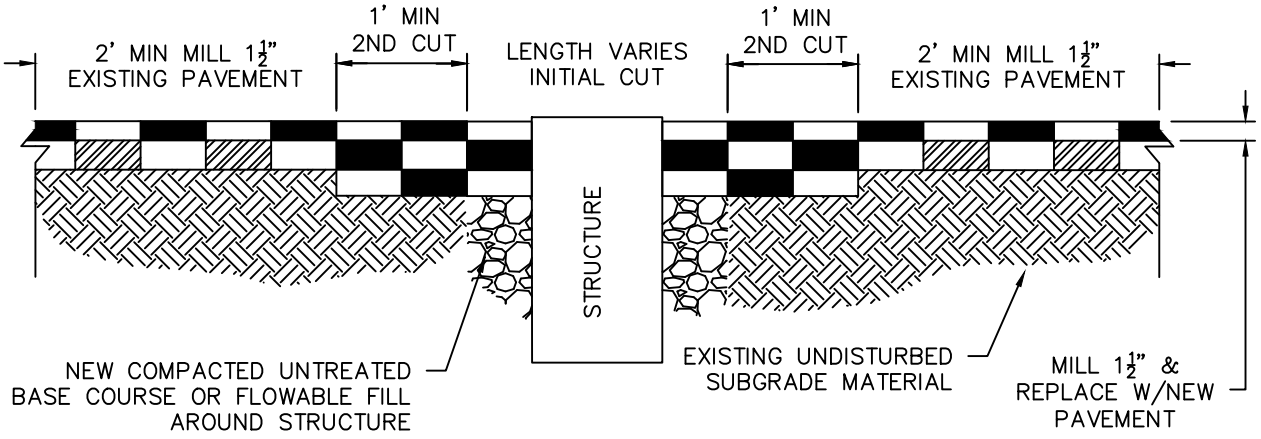

PATCHBACK FOR STRUCTURES (MANHOLES, VALVES ETC)

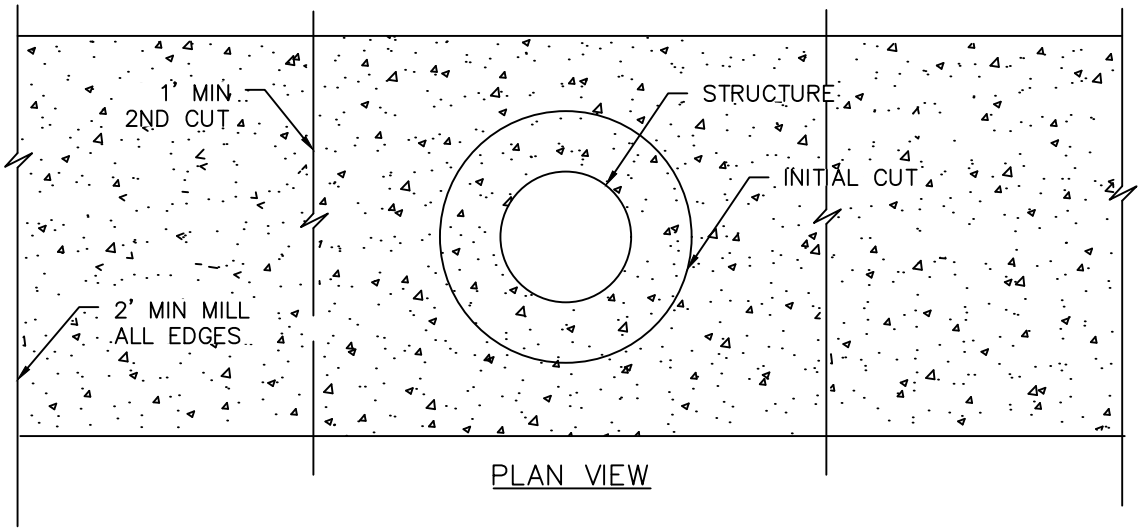

PLAN VIEW

NOTE:

1. IF ASPHALT PATCH THICKNESS IS NOT IDENTIFIED ON PLANS USE 6½" MIN ASPHALT PATCH OR EXISTING THICKNESS PLUS 1", WHICH EVER THICKNESS IS GREATER.
2. MINIMUM DEPTH OF WEARING COURSE SHALL BE 1½" AND SHALL BE GRADING SX ASPHALT.
3. MINIMUM DEPTH OF INTERMEDIATE COURSE SHALL BE 5" AND BE INSTALLED IN 2 LIFTS. INTERMEDIATE COURSE SHALL BE GRADING S OR G ASPHALT.
4. PATCH SHALL BE PLACED AND COMPACTED IN LIFTS A MAXIMUM OF 3" IN DEPTH.
5. APPLY SS-I TACK COAT TO EXISTING ASPHALT AND/OR CONCRETE VERTICAL SURFACES.
6. TRENCHES LESS THAN 2' IN WIDTH MUST RECEIVE PRIOR APPROVAL FROM THE TOWN OF FIRESTONE ENGINEERING DEPARTMENT AND SHALL BE FLOW-FILLED.
7. PROVIDE 28 DAY 60 PSI CONTROLLED LOW STRENGTH FLOWABLE FILL AS SPECIFIED. USE FILL THAT FLOWS EASILY AND VIBRATION IS NOT REQUIRED. CURE TO INITIAL SET BEFORE PLACING NEW UNTREATED BASE COURSE OR NEW ASPHALT PAVEMENT. USE FLOWABLE FILL IN EXCAVATIONS THAT ARE TOO NARROW TO RECEIVE COMPACTION EQUIPMENT.
8. REMOVE ADDITIONAL PAVEMENT TO A PAINTED LANE STRIPE, A LIP OF GUTTER, A CURB, AN EXISTING PAVEMENT PATCH, OR AN EDGE OF THE PAVEMENT IF SUCH STREET FEATURE IS WITHIN TWO FEET OF THE SECOND SAW CUT.
9. PROVIDE UNTREATED BASE COURSE MATERIAL. DO NOT USE GRAVEL OR WASHED ROCK. PLACE NEW MATERIAL IN LIFTS NOT EXCEEDING 8" AFTER COMPACTION. COMPACT TO A MODIFIED PROCTOR DENSITY OF 95% OR GREATER.
10. STRAIGHT SAWCUT OR BLADECUT THE EXISTING ASPHALT PAVEMENT WHEN JOINING WITH NEW ASPHALT PAVEMENT.

STRUCTURE PATCH

FIRESTONE COLORADO	STREET CONSTRUCTION DRAWINGS	BY: JME SCALE: NTS DATE: 11/2019	DRAWING: ST9

STANDARD ORIENTATION:
NORTH–SOUTH STREETS ON TOP
EAST–WEST STREETS ON BOTTOM

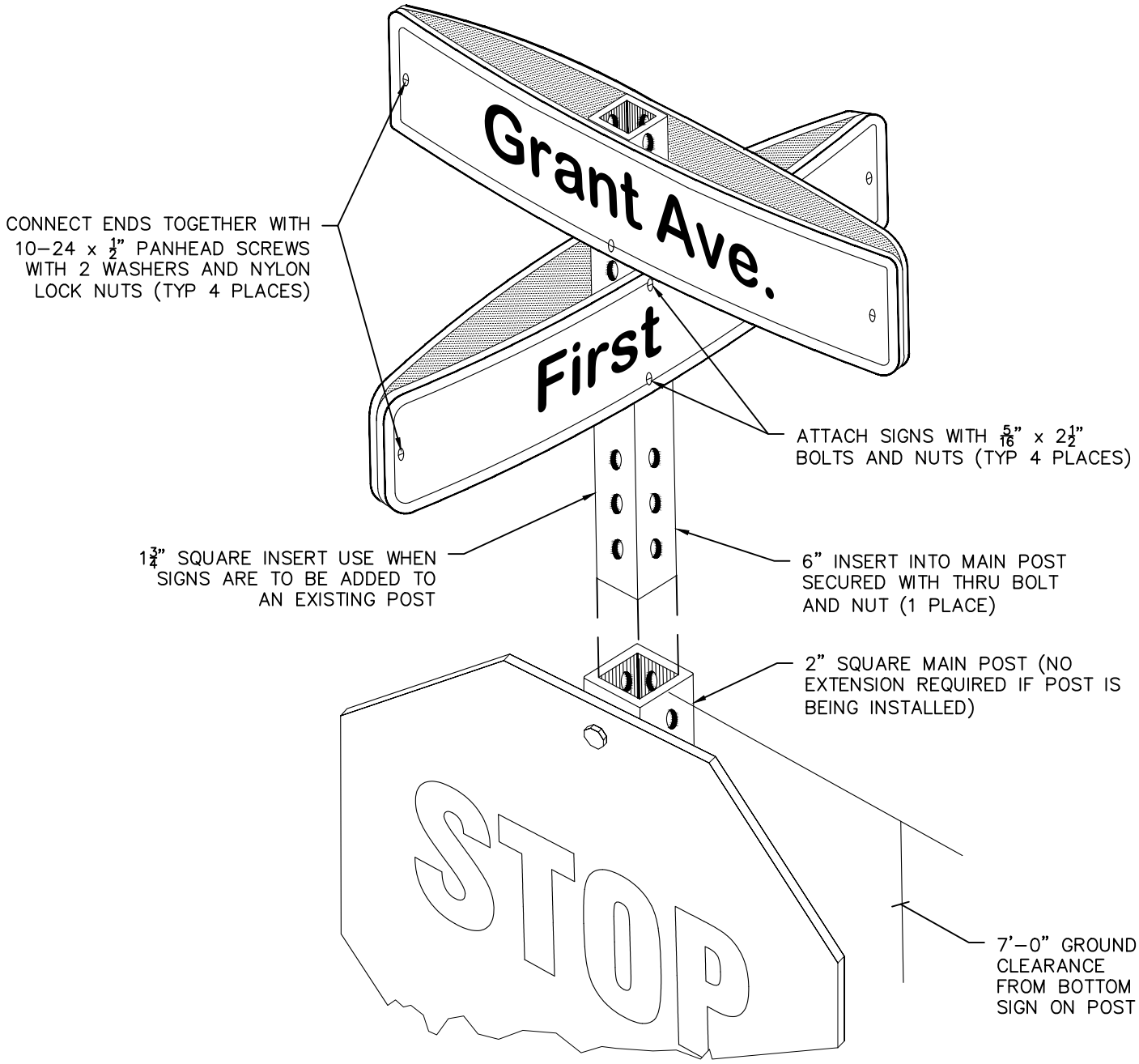

GROUND MOUNT STREET NAME SIGN

FIRESTONE COLORADO	STREET CONSTRUCTION DRAWINGS	BY: JME SCALE: NTS DATE: 11/2019	DRAWING: ST10A

9" STREET SIGN WITH TOWN OF FIRESTONE LOGO

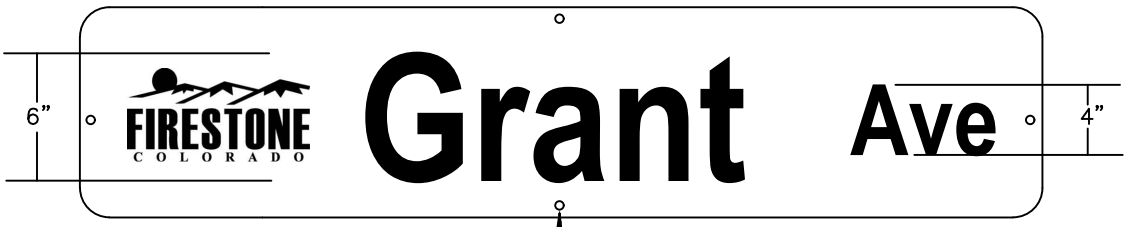

3/8" HOLE FOR MOUNTING (TYP)

6" STREET SIGN WITHOUT TOWN OF FIRESTONE LOGO

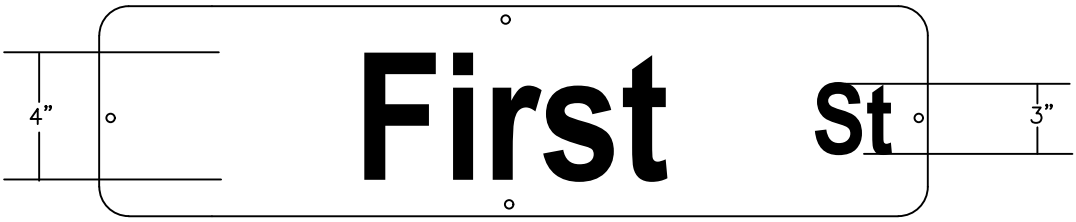

INTERSECTION TYPE	SIGN BLANK SIZE (30" MINIMUM ON ALL LENGTHS)	MOUNTING	RECOMMENDED MINIMUM			
			LETTER HEIGHT		SUFFIX (ST, AVE, CT ETC)	
			INITIAL UPPER CASE	LOWER CASE	INITIAL UPPER CASE	LOWER CASE
ARTERIALS AT SIGNAL LIGHTS WITH LOGO		OVERHEAD	12 INCHES	9 INCHES	6 INCHES	4.5 INCHES
MULTI LANE ARTERIALS AND ALL OTHERS DIRECTED BY PUBLIC WORKS DEPT WITH LOGO	10" X AS NEEDED	POST MOUNTED	8 INCHES	6 INCHES	4.5 INCHES	3.5 INCHES
ARTERIALS & COLLECTORS AND ALL OTHERS DIRECTED BY PUBLIC WORKS DEPT WITH LOGO	9" X AS NEEDED	POST MOUNTED	6 INCHES	4.5 INCHES	4 INCHES	3 INCHES
LOCAL/NO LOGO	9" X AS NEEDED	POST MOUNTED	6 INCHES	4.5 INCHES	4 INCHES	3 INCHES
*LOCAL/NO LOGO	6" X AS NEEDED	POST MOUNTED	4 INCHES	3 INCHES	3 INCHES	2.25 INCHES
*ON LOCAL TWO-LANE STREETS WITH SPEED LIMITS OF 25 MPH OR LESS, 4 INCH INITIAL UPPER-CASE LETTERS WITH 3 INCH LOWER CASE LETTERS MAY BE USED						
NO BORDERS EXCEPT ON OVERHEAD LIGHTED STREET SIGNS AT SIGNALIZED INTERSECTIONS						
WHEN LOGO IS DISPLAYED, THE HEIGHT AND WIDTH OF THE LOGO SHALL NOT EXCEED THE UPPER CASE LETTER HEIGHT OF THE PRINCIPAL LEGEND OF THE SIGN AND LOCATED LEFT OF THE STREET NAME						

NOTES:

1. SIGN BLANKS SHALL BE 6061 OR 5052-H38 ALUMINUM ALLOY MIN 0.080" THICK.
2. FACING SHALL BE GREEN HI-INTENSITY RETROREFLECTIVE SHEETING.
3. LETTERS AND NUMBERS SHALL BE WHITE RETROREFLECTIVE SHEETING.
4. TOWN OF FIRESTONE COLOR LOGO IS TO BE USED FOR COLLECTOR AND ARTERIAL STREET BLADES ONLY.
5. 30" MIN. LENGTH ON ALL STREET SIGNS, SINGLE FACE FOR BACK TO BACK INSTALLATION AND ¼" HOLES FOR PINNING ENDS OF SIGNS TOGETHER.
6. THE SIZING OF ALL SIGNS AT AN INTERSECTION SHALL BE UNIFORM AND BE DETERMINED BY THE HIGHEST CLASSIFICATION ROAD AT AN INTERSECTION.

ROAD AND STREET NAME SIGNS

FIRESTONE COLORADO	STREET CONSTRUCTION DRAWINGS	BY: JME SCALE: NTS DATE: 11/2019	DRAWING: ST10B

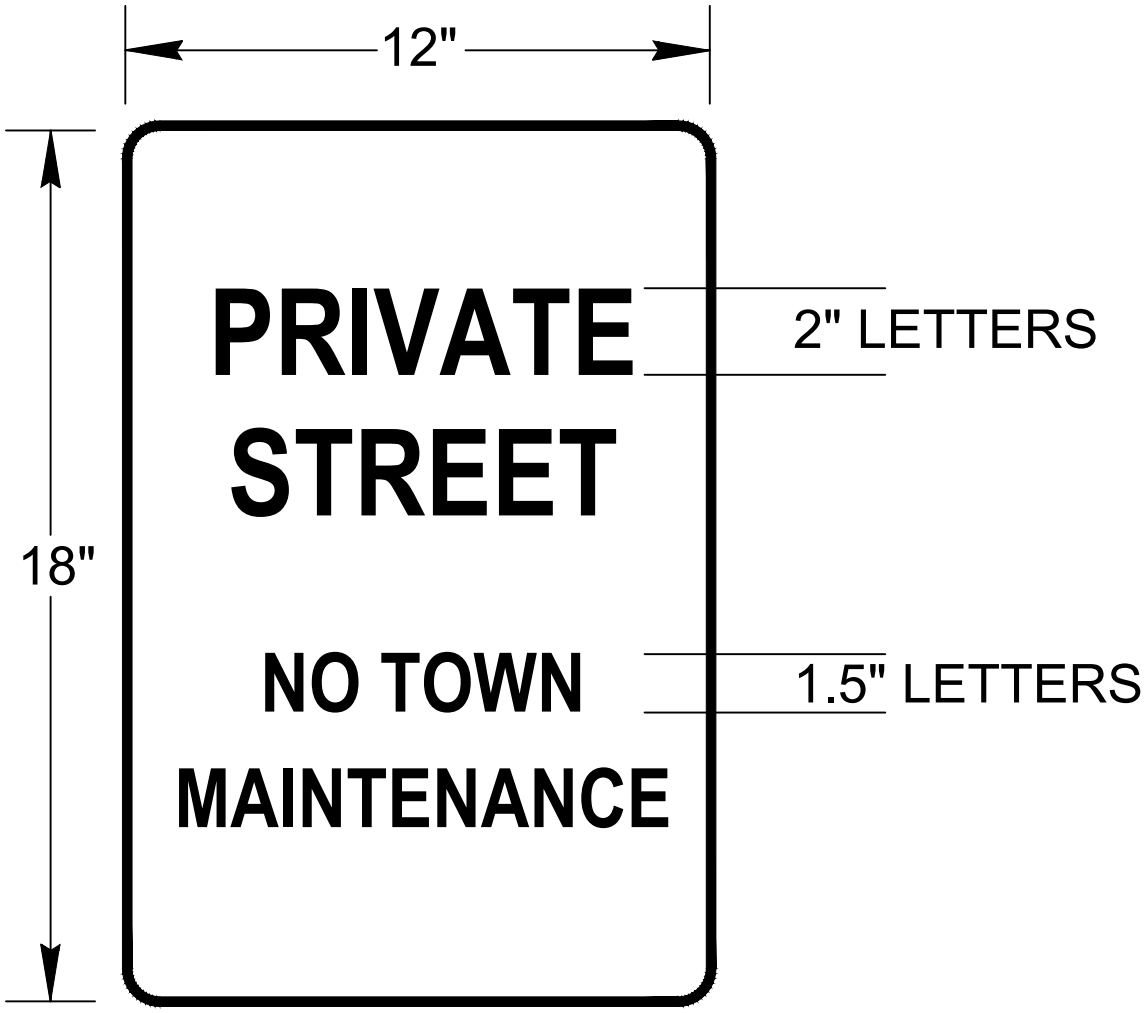

NOTES:

1. SIGN BLANKS SHALL BE 6061 OR 5052–H38 ALUMINUM ALLOY MIN. 0.080" THICK.
2. FACING SHALL BE WHITE RETROREFLECTIVE.
3. LETTERS SHALL BE BLACK.

PRIVATE STREET SIGN

FIRESTONE COLORADO	STREET CONSTRUCTION DRAWINGS	BY: JME SCALE: NTS DATE: 11/2019	DRAWING: ST10C

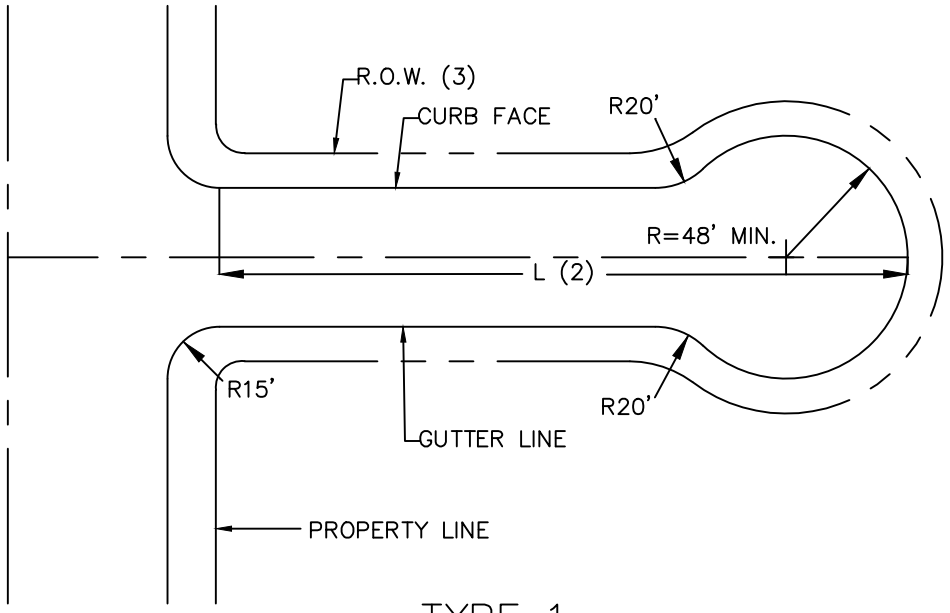

TYPE 1

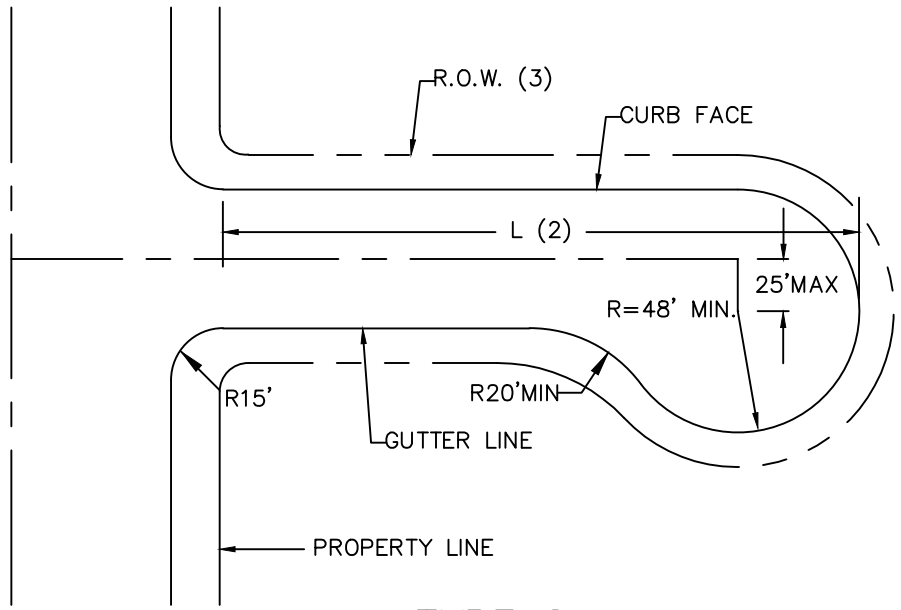

TYPE 2

NOTES:

(1) WIDTH OF TYPE 1 & 2 CUL-DE-SACS TO CONFORM TO APPLICABLE TYPICAL STREET CROSS SECTIONS.

(2) SEE SECTION 526.00 CUL-DE-SACS FOR LENGTH (L) REQUIREMENTS.

(3) R.O.W. LINES ARE TO BE PARALLEL TO AND OFFSET FROM THE CURB FACE AND THE DISTANCE SHALL MATCH THE STREET SECTION DETAIL.

CUL-DE-SAC

FIRESTONE COLORADO	STREET CONSTRUCTION DRAWINGS	BY: JME SCALE: NTS DATE: 11/2019	DRAWING: ST11

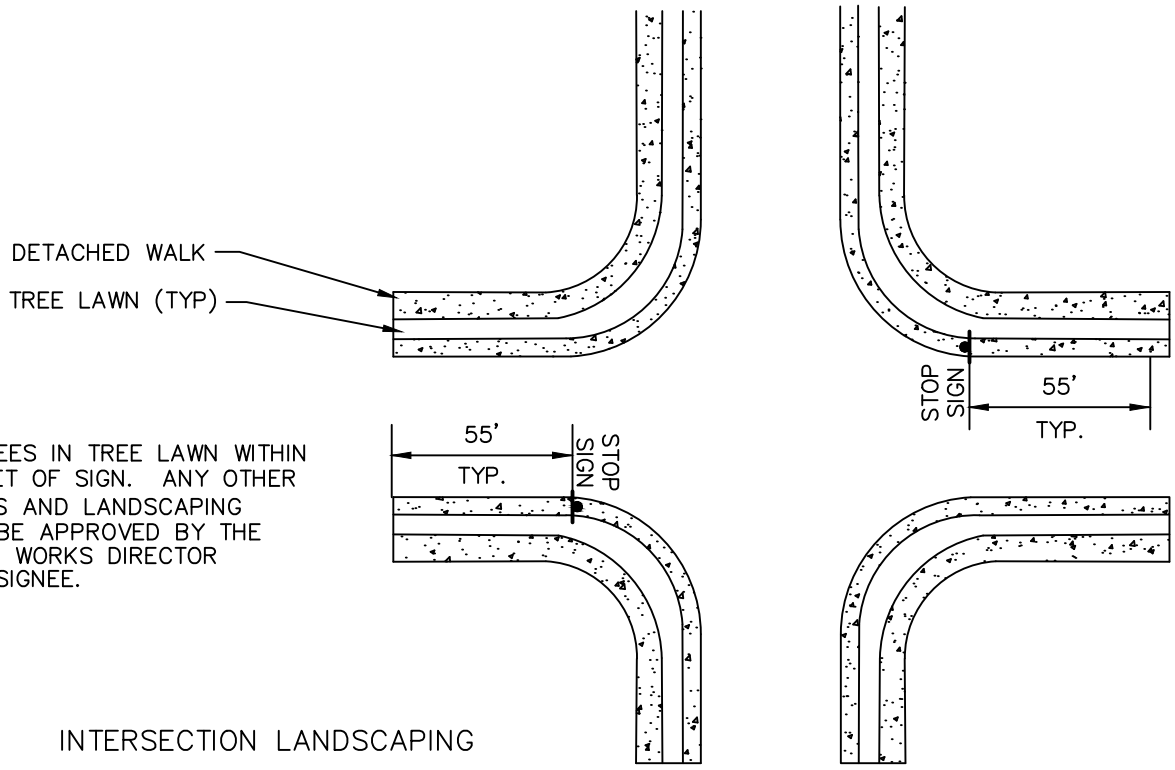

NO TREES IN TREE LAWN WITHIN 55 FEET OF SIGN. ANY OTHER PLANTS AND LANDSCAPING MUST BE APPROVED BY THE PUBLIC WORKS DIRECTOR OR DESIGNEE.

INTERSECTION LANDSCAPING

STOPPED APPROACH

SIGHT DISTANCE REQUIREMENT FOR INTERSECTIONS WITH TRAFFIC CONTROL DEVICES

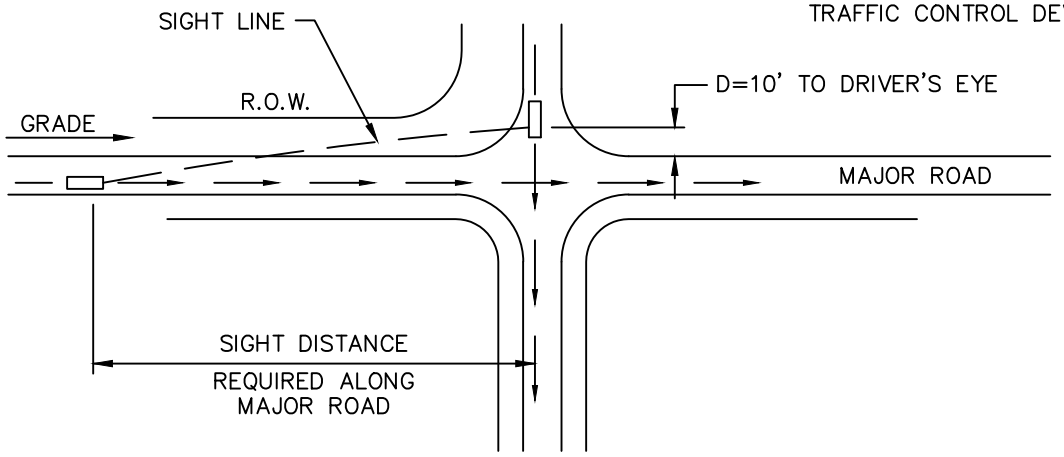

DESIGN SPEED OF THRU ROADWAY (MPH)	MINIMUM SIGHT DISTANCE FOR STOPPED VEHICLE (FEET)
25	250
30	300
35	350
40	400
45	450

GRADE CORRECTION DISTANCE (FEET)				
SPEED	UPGRADE TO		FOR DOWNGRADES	
	3%	6%	3%	6%
25	0	−10	+10	+20
30	0	−10	+10	+20
35	−10	−15	+10	+25
40	−10	−20	+10	+30
45	−15	−25	+15	+40

SIGHT DISTANCE

FIRESTONE COLORADO

STREET CONSTRUCTION DRAWINGS

BY: JME

SCALE: NTS

DATE: 11/2019

DRAWING: ST12

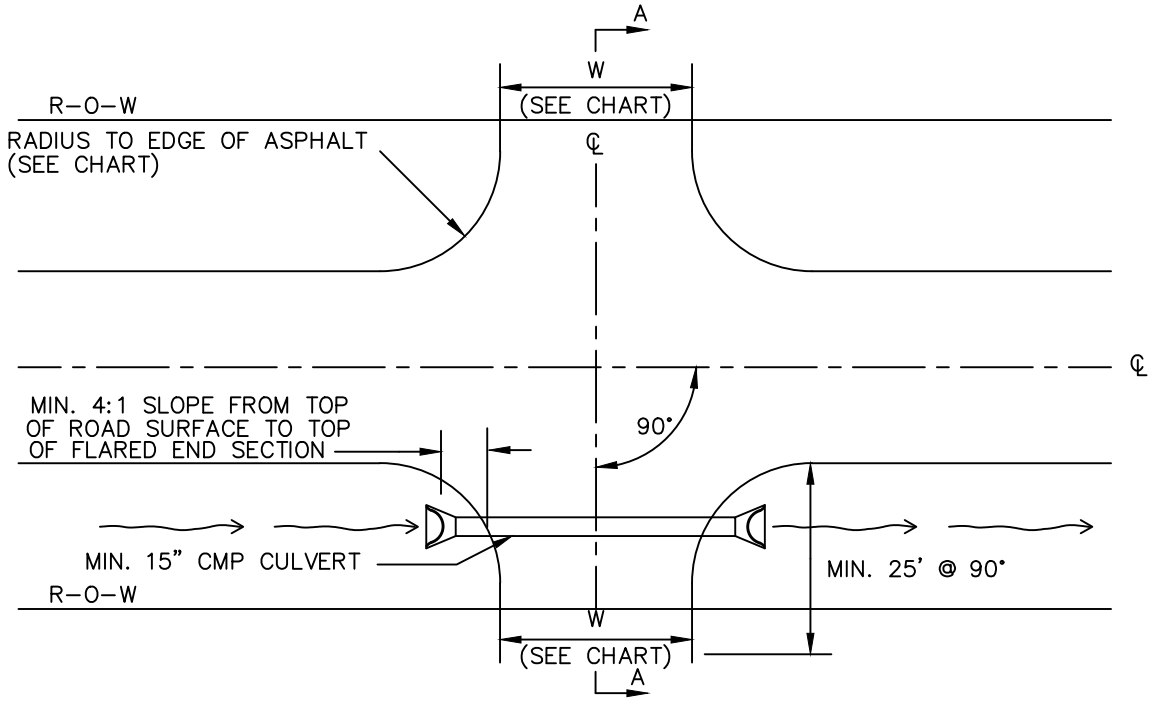

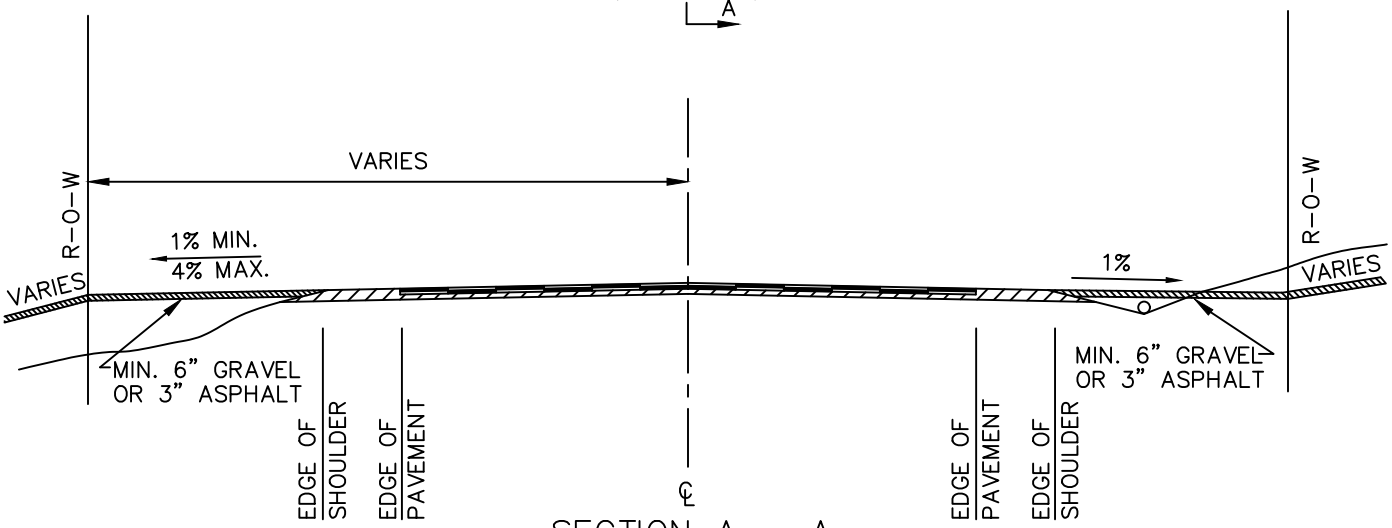

SECTION A – A

	DRIVEWAY WIDTH (FEET)	PAVEMENT RADIUS (FEET)
RESIDENTIAL	10–25	10
NON–RESIDENTIAL	15–35	15

NOTES:

1. THE TOWN OF FIRESTONE ENGINEERING DEPARTMENT WILL DETERMINE THE REQUIRED CULVERT SIZE. FLARED END SECTIONS ARE REQUIRED FOR CULVERTS 24" IN DIAMETER OR LARGER.
2. DRIVEWAY PERMITS ARE REQUIRED FROM THE TOWN OF FIRESTONE ENGINEERING DEPARTMENT.
3. THE TOWN OF FIRESTONE ENGINEERING DEPARTMENT MUST REVIEW DRIVEWAY LOCATIONS ONTO COLLECTOR AND ARTERIAL ROADS PRIOR TO A PERMIT BEING ISSUED.

DRIVEWAY APPROACHES FOR ROADS

FIRESTONE COLORADO	STREET CONSTRUCTION DRAWINGS	BY: JME SCALE: NTS DATE: 11/2019	DRAWING: ST13

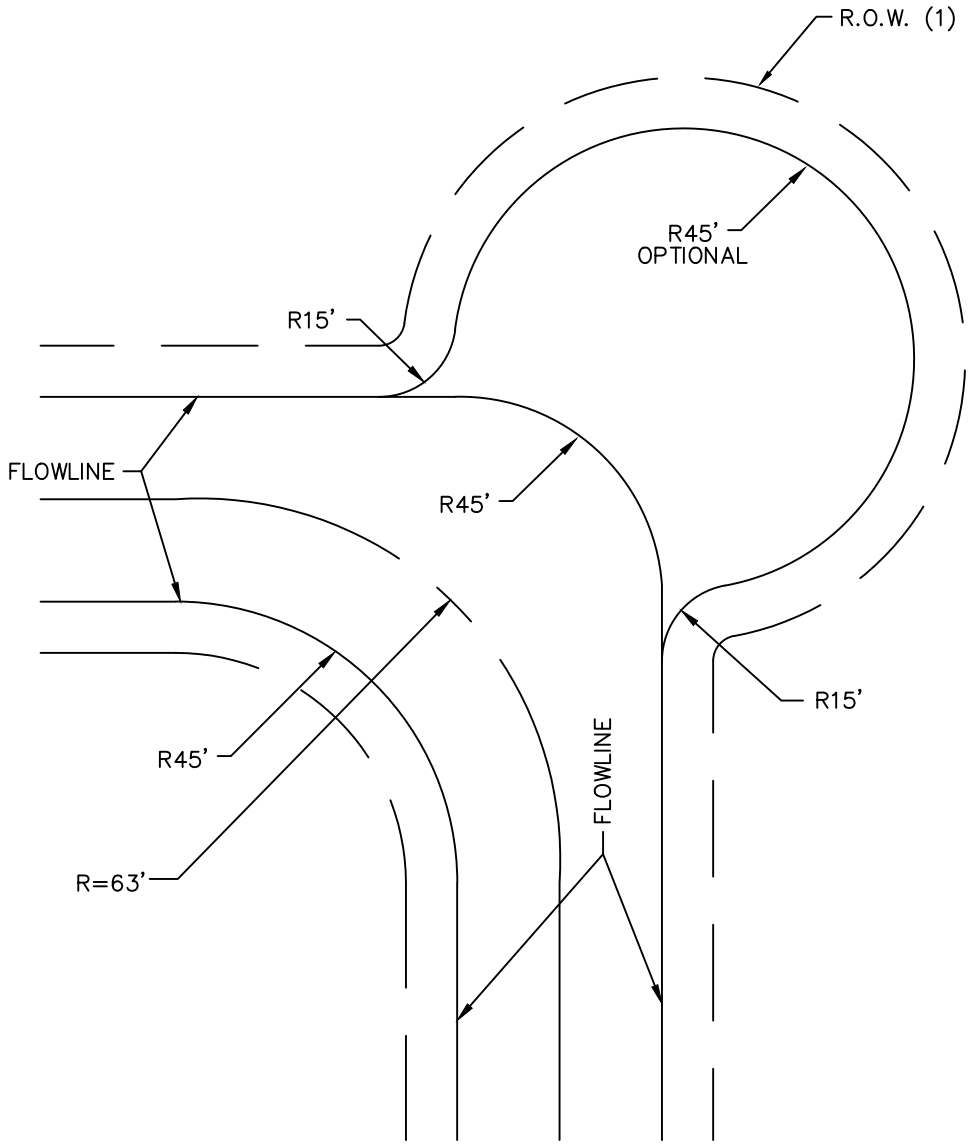

NOTE:

1. 20MPH ADVISORY SIGNS REQUIRED ON CURVE APPROACHES

90 DEGREE TURN - LOCAL ACCESS STREETS

FIRESTONE COLORADO	STREET CONSTRUCTION DRAWINGS	BY: JME SCALE: NTS DATE: 11/2019	DRAWING: ST14

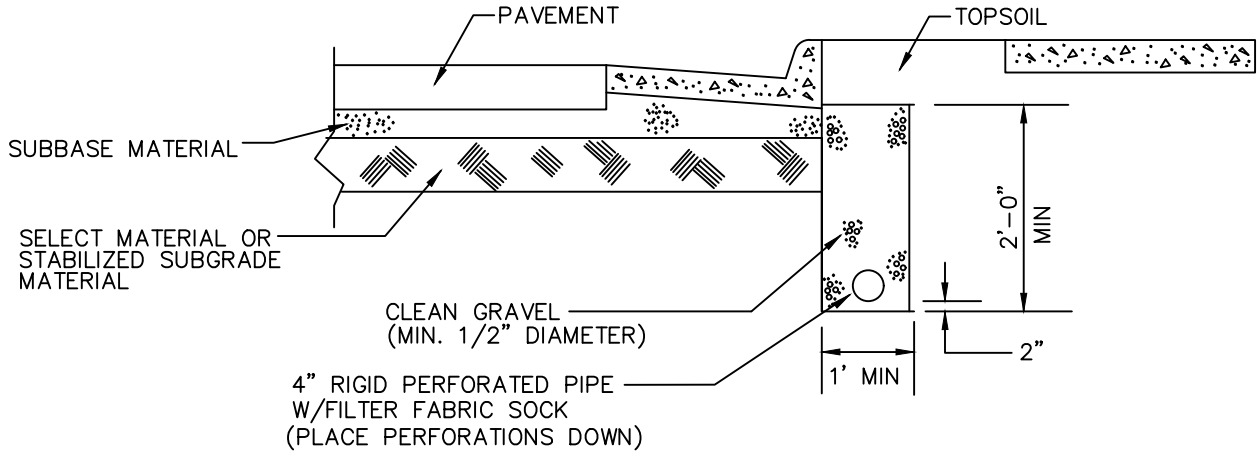

4" PERFORATED UNDERDRAIN DETAIL

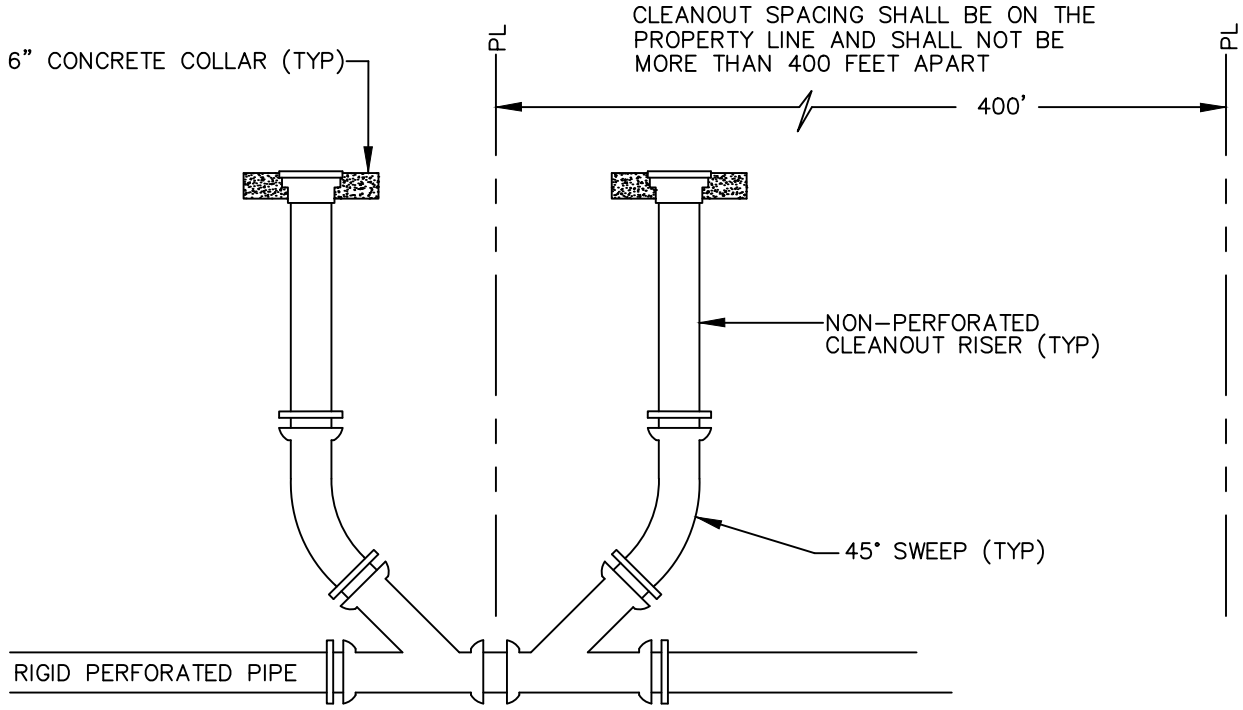

NOTES:

1. CURB STOP TO BE A MIN. OF 1' BEHIND TRENCH.
2. PERFORATED DRAIN NEEDS TO DAYLIGHT INTO DRAINAGE SYSTEM.
3. PROVIDE PLUG ON UPSTREAM END OF PIPE.
4. PERFORATED PIPE SHALL FOLLOW ESTABLISHED GRADE AND HAVE POSITIVE FLOW.
5. UNDERDRAINS WILL BE ON ALL ROADS WITH DETACHED SIDEWALKS AND IRRIGATED TREE LAWNS.
6. WHERE THE BOTTOM OF SELECT MATERIAL IS GREATER THAN 4' BELOW PAVEMENT, THE UNDERDRAIN PIPE IS TO BE COINCIDENT WITH THE BOTTOM OF SELECT MATERIAL AND THE TRENCH DEPTH AND BACKFILL QUANTITIY INCREASED ACCORDINGLY.
7. PLACE A VALVE BOX TOP WITH LID AND 6" THICK CONCRETE COLLAR AT ALL 4" PERFORATED UNDERDRAIN CLEANOUTS.
8. WHEN CURB AND GUTTER IS IN PLACE, THE CLEANOUTS SHALL BE MARKED ON THE CONCRETE CURB FACE WITH A "+".

4" PERFORATED UNDERDRAIN

FIRESTONE COLORADO	STREET CONSTRUCTION DRAWINGS	BY: JME SCALE: NTS DATE: 11/2019	DRAWING: ST15A

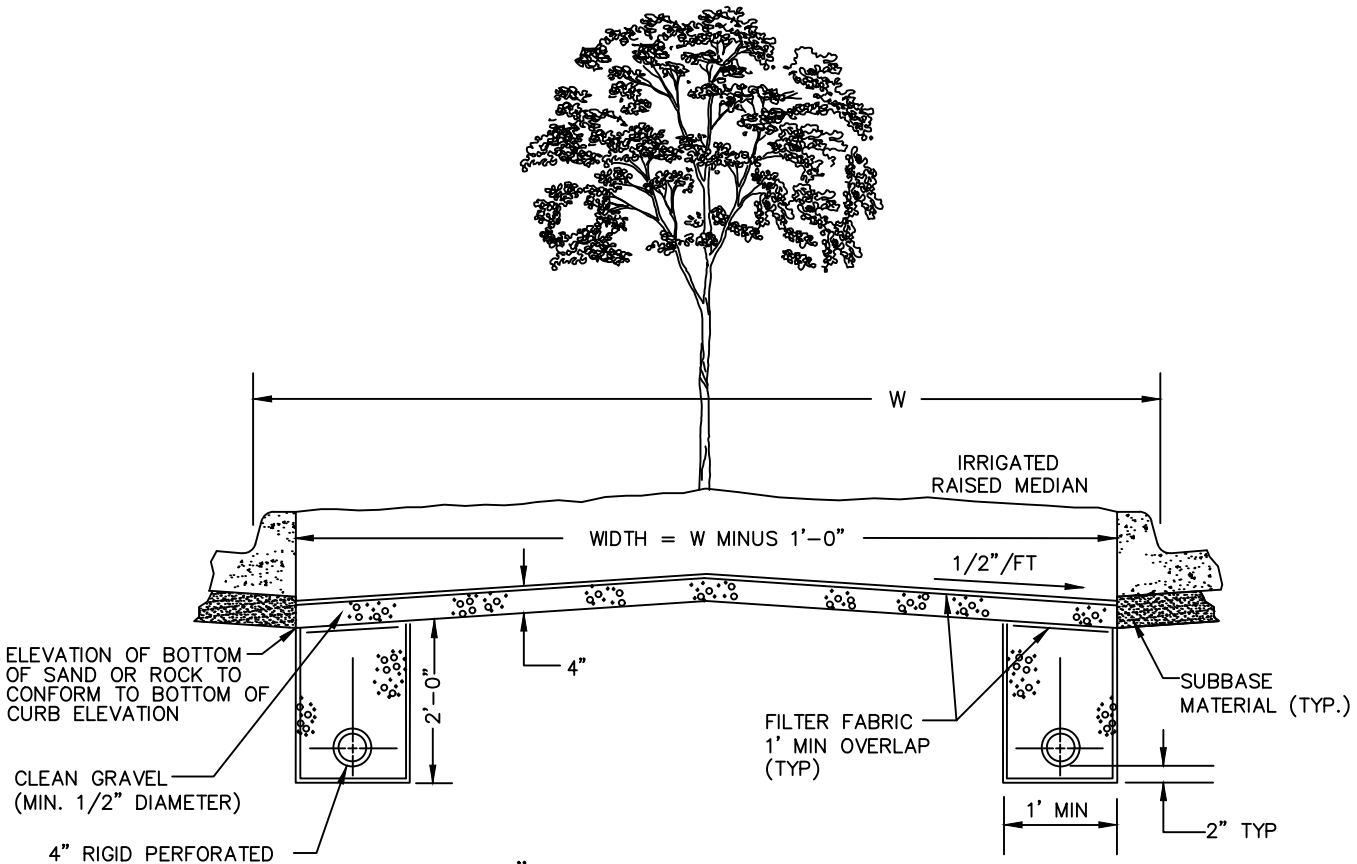

4" PERFORATED UNDERDRAIN WITH SUBSURFACE MATERIAL

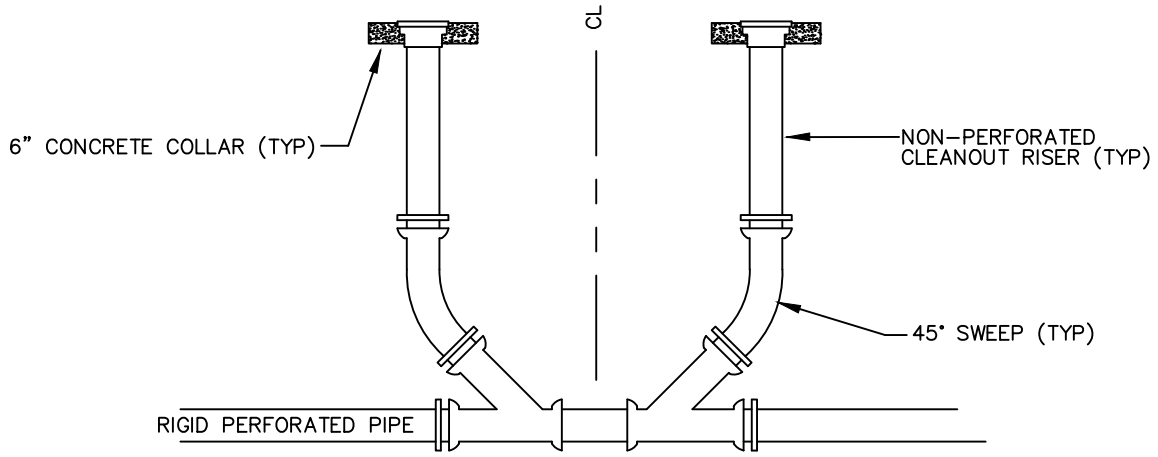

NOTES:

1. PERFORATED DRAIN NEEDS TO DAYLIGHT INTO DRAINAGE SYSTEM.
2. CLEANOUTS SHALL BE SPACED A MAXIMUM OF 400'.
3. PERFORATED PIPE SHALL FOLLOW ESTABLISHED GRADE AND HAVE POSITIVE FLOW.
4. PLACE A VALVE BOX TOP WITH LID AND 6" THICK CONCRETE COLLAR AT ALL 4" PERFORATED UNDERDRAIN CLEANOUTS.
5. WHEN CURB AND GUTTER IS IN PLACE, THE CLEANOUTS SHALL BE MARKED ON THE CONCRETE CURB FACE WITH A "+".

4" PERFORATED MEDIAN UNDERDRAIN FOR CENTER PLANTING

FIRESTONE COLORADO	STREET CONSTRUCTION DRAWINGS	BY: JME SCALE: NTS DATE: 11/2019	DRAWING: ST15B

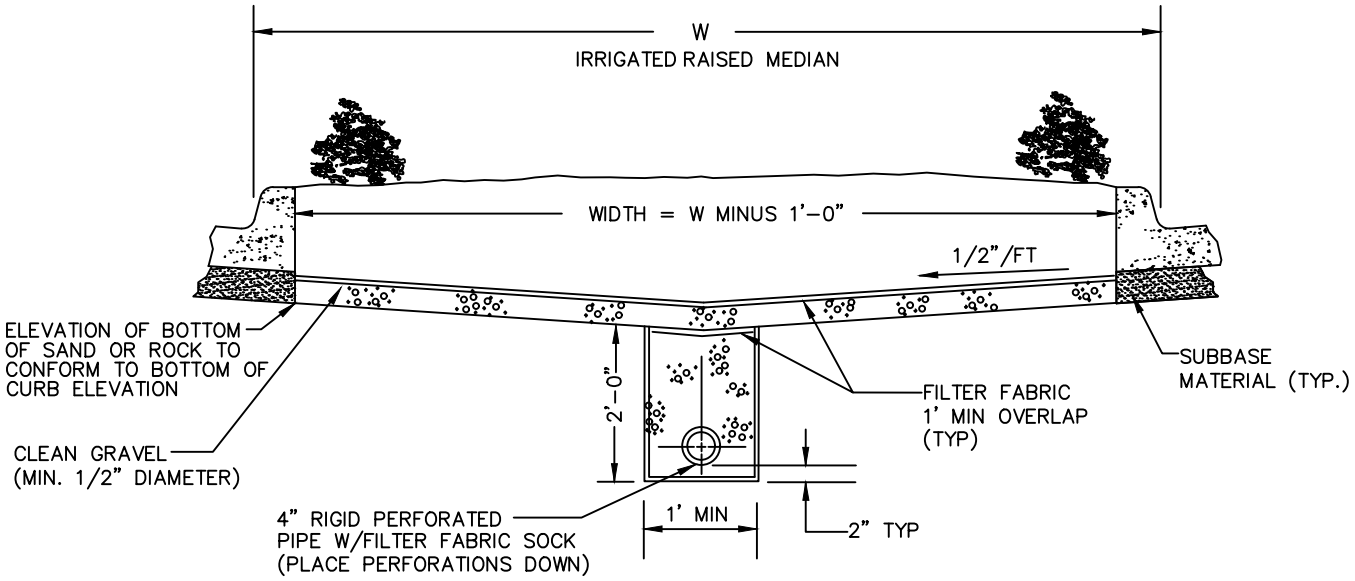

4" PERFORATED UNDERDRAIN
WITH SUBSURFACE MATERIAL

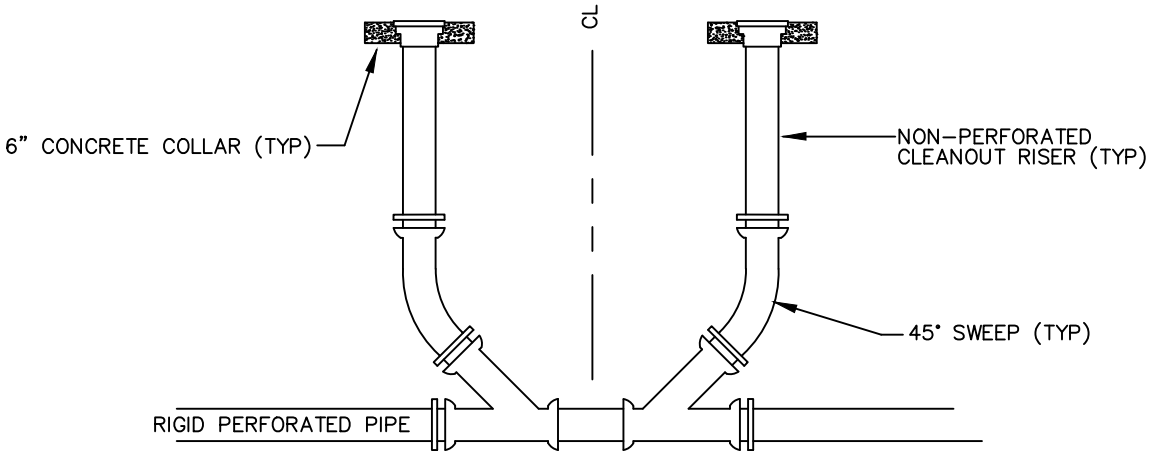

NOTES:

1. PERFORATED DRAIN NEEDS TO DAYLIGHT INTO DRAINAGE SYSTEM.
2. CLEANOUTS SHALL BE SPACED A MAXIMUM OF 400'.
3. PERFORATED PIPE SHALL FOLLOW ESTABLISHED GRADE AND HAVE POSITIVE FLOW.
4. PLACE A VALVE BOX TOP WITH LID AND 6" THICK CONCRETE COLLAR AT ALL 4" PERFORATED UNDERDRAIN CLEANOUTS.
5. WHEN CURB AND GUTTER IS IN PLACE, THE CLEANOUTS SHALL BE MARKED ON THE CONCRETE CURB FACE WITH A "+".

4" PERFORATED MEDIAN UNDERDRAIN FOR EDGE PLANTING

FIRESTONE COLORADO	STREET CONSTRUCTION DRAWINGS	BY: JME SCALE: NTS DATE: 11/2019	DRAWING: ST15C

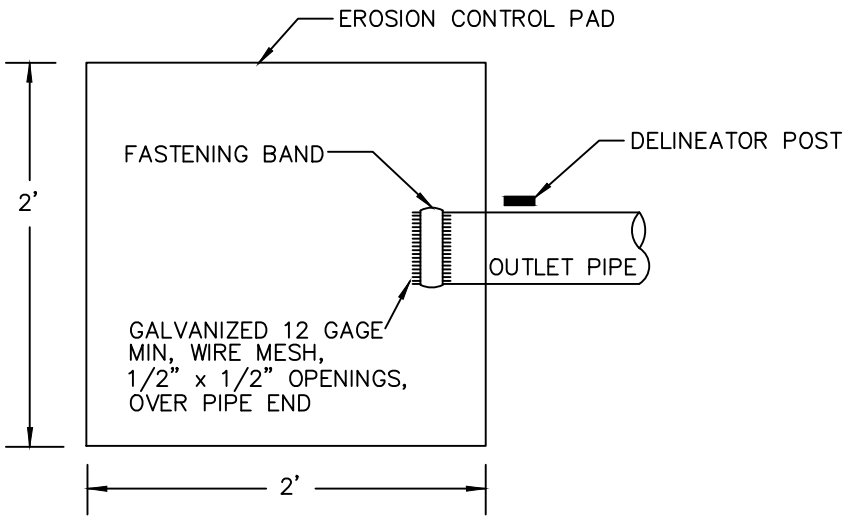

PLAN

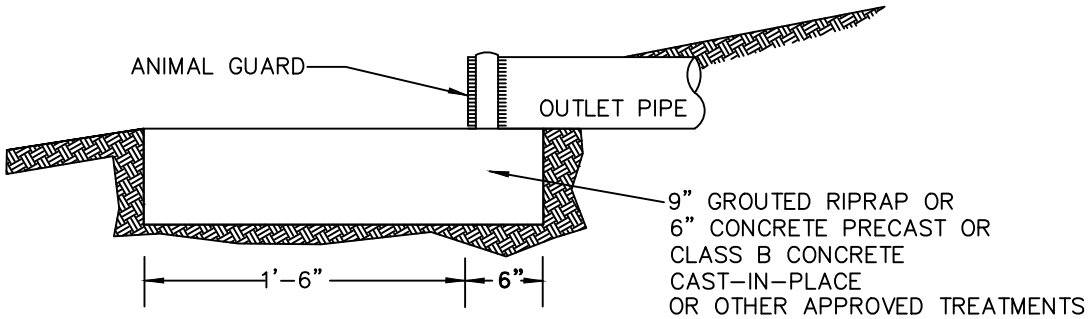

PROFILE

OUTLET PIPE
END TREATMENT

UNDERDRAIN OUTLET TREATMENT

FIRESTONE COLORADO	STREET CONSTRUCTION DRAWINGS	BY: JME SCALE: NTS DATE: 11/2019	DRAWING: ST16

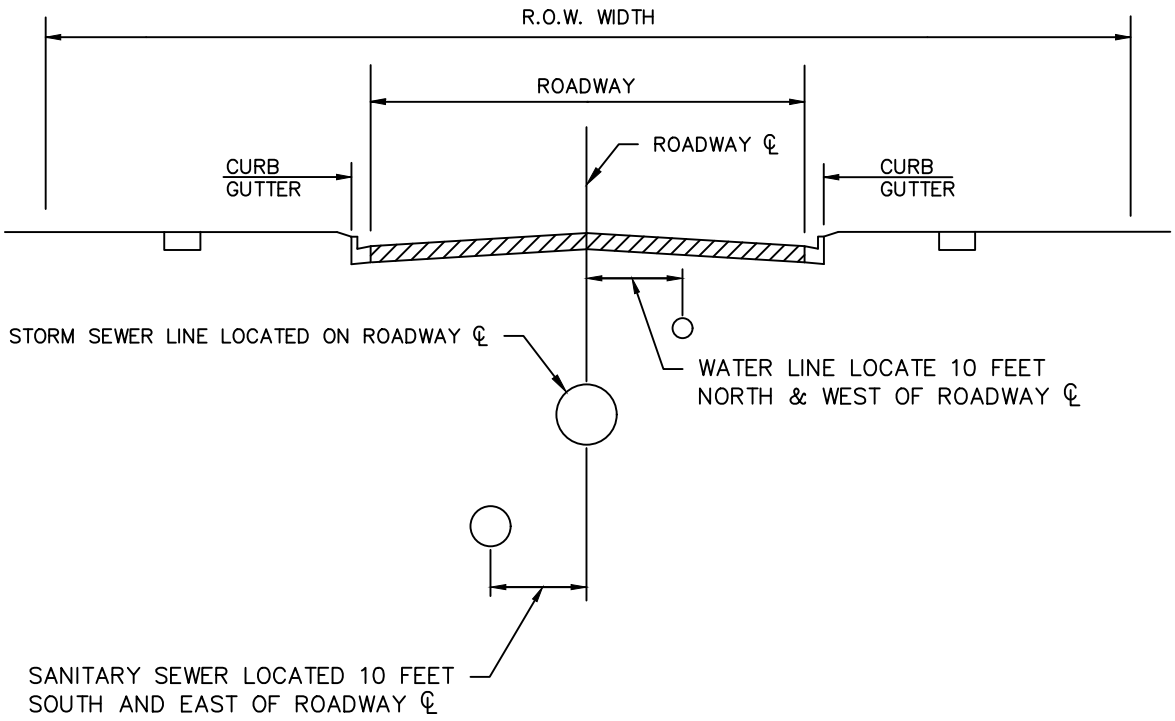

TYPICAL UTILITY LOCATIONS ON NORMAL ROADWAY

NOTES:

1. VERTICAL DEPTH LOCATION OF UTILITIES VARIES (REFER TO LATEST TOWN OF FIRESTONE STANDARDS AND SPECIFICATIONS FOR ALLOWABLE DEPTHS)
2. HORIZONTAL DIMENSIONS BASED ON ℄ TO ℄ OF VARIOUS PIPE UTILITIES.
3. UTILITY SEPARATION ALONG ℄ ROADWAY RADIAL ARC REVIEWED ON AN INDIVIDUAL PROJECT BASIS (MUST MAINTAIN 10 FEET OF HORIZONTAL SEPARATION).

TYPICAL STREET UTILITY LOCATION

FIRESTONE COLORADO	STREET CONSTRUCTION DRAWINGS	BY: JME SCALE: NTS DATE: 11/2019	DRAWING: ST17